The Rank-Cintel Twin-Claw Twin-Lens Flying-Spot 16 mm Film Scanner

by T. C. Nuttall, B.Sc., Tech., D. W. Boston, B.Sc., A.M.I.E.E.,
G. H. Askew, B.Sc., A.M.I.E.E. and P. Lowry, A.M.I.E.E., A.M.I.E.R.E.

REPRINTED FROM
THE BRITISH KINEMATOGRAPHY SOUND
AND
TELEVISION SOCIETY JOURNALS

Volume 48 · Number 1 · January 1966
Volume 48 · Number 2 · February 1966

The Rank-Cintel Twin-Claw Twin-Lens Flying-Spot 16mm Film Scanner

Parts 1, 2, 3 and 4

by T. C. Nuttall, B.Sc., Tech., D. W. Boston, B.Sc., A.M.I.E.E., G. H. Askew, B.Sc., A.M.I.E.E., and
P. Lowry, A.M.I.E.E., A.M.I.E.R.E.*

Introduction

This paper was read before the Society in four parts. Parts I and II are published in this Journal and Parts III and IV will appear in next month's issue, when the discussion following this lecture will also be published.

The first twin-lens flying-spot film scanner was designed in 1947 for 35 mm film. A prototype was shown at the B.I.F. in 1948 and two machines went into service with the BBC at Alexandra Palace towards the end of 1950. This scanner has already been described. (1)

With the increasing use of 16 mm film it became desirable to develop a machine with a similar performance for use with this film (including colour). Although many of the operating principles are equally applicable to 16 mm, a "scaled-down" version of the original design would have been unsatisfactory in several respects. The first part of the present paper is mainly concerned with those aspects of the 16 mm version which have required new solutions. Only a brief description is included of those principles common to the two machines, and reference should be made to the original paper for further details such as the reasons for choosing the particular method of scanning, etc.

Part 1

by T. C. Nuttall

Method of Scanning

In a cathode ray tube flying-spot scanner the scanned raster on the cathode ray tube is imaged by suitable optics on to the film. Light passing through the film is directed by a condenser system to a photocell whose output, after amplification and circuit processing, becomes the video signal. If a colour signal is required, the condenser system includes dichroic mirrors which divide the light into red, blue and green components directed on to three separate photocells.

When this system is applied to continuously moving film, the movement of the film supplies a part (approximately half) of the required vertical scan, thus the required raster on the cathode ray tube is approximately half the usual height. Furthermore, the two consecutive field scans required for each picture must be displaced along the length of the film by the distance moved by the film during the field period. The "twin-lens" solution to this problem is to provide two complete lens systems imaging the raster on to the film, and to "fold" the optical path of each by two plane reflections to bring the images to the correct spacing on the film. (2) The alternate selection of the two lens systems is accomplished by a shutter, midway between the lenses and the cathode ray tube, comprising a series of horizontal bars separated by spaces moving downwards at half scan speed. At each field scan flyback the shadow of a bar and an adjacent space change places on the lenses. (3)

Optical Design (*See Fig. 1*)

The picture size to be scanned is 0·276 in × 0·368 in. During each field scan the film moves 0·1388 in which supplies slightly more than half the height of the picture, leaving 0·1372 in as the reduced height of the raster. The field period is 0·02 second during which time the film moves 0·1492 in. Thus scanning is required in two rectangular areas each 0·1372 in × 0·368 in spaced by 0·1492 in, leaving only a gap of 0·012 in between the required images. This small gap, (less than one tenth of the corresponding value in the 35 mm case) implies that the optical system must be positioned very close to the film to avoid vignetting the adjacent edges of the two images.

The small area of the picture (about 21 per cent of the 35 mm image) requires a considerable increase of optical aperture to pass sufficient light flux. A numerical aperture of 0·25 is specified, i.e., the semi-angle of the cone of light arriving at each point of the image is 14½°. Largely as a result of this wide angle it is not possible to fold the short conjugate by reflections at plane surfaces in air. Instead, the folding is accomplished by internal reflection at two surfaces of a rhombic prism of high refractive index glass. The path length in the glass is 0·875 in but because of the high index (1·70) this represents only about 0·51 in of air. The prisms produce considerable chromatic and other aberrations which must be allowed for in the design of the lenses.

An optical reduction of 12 : 1 was chosen to provide a suitable size of raster (1·646 in × 4·416 in) on the cathode ray tube. The nominal conjugates of the lens are 1·2 in and 14·4 in (corresponding to a focal length of 28 mm).

The lens was designed by W. M. Wreathall, then of Taylor, Taylor & Hobson. It has one cemented doublet and four single glasses. Provision is made, by the adjustment of one spacer, for equalising the image sizes of a pair of lenses to limits much closer than normal manufacturing tolerances.

The preferred position of the emulsion side of the film is towards the imaging optics, but 16 mm film may have the emulsion on either side. When scanning film with emulsion on the "wrong" side, two very weak supple-

---

*The authors were with Rank-Cintel.

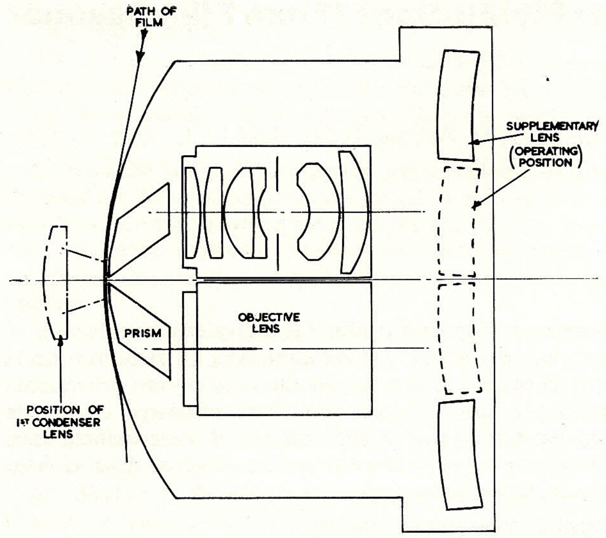

DIAGRAM OF FILM GATE

Fig. 1

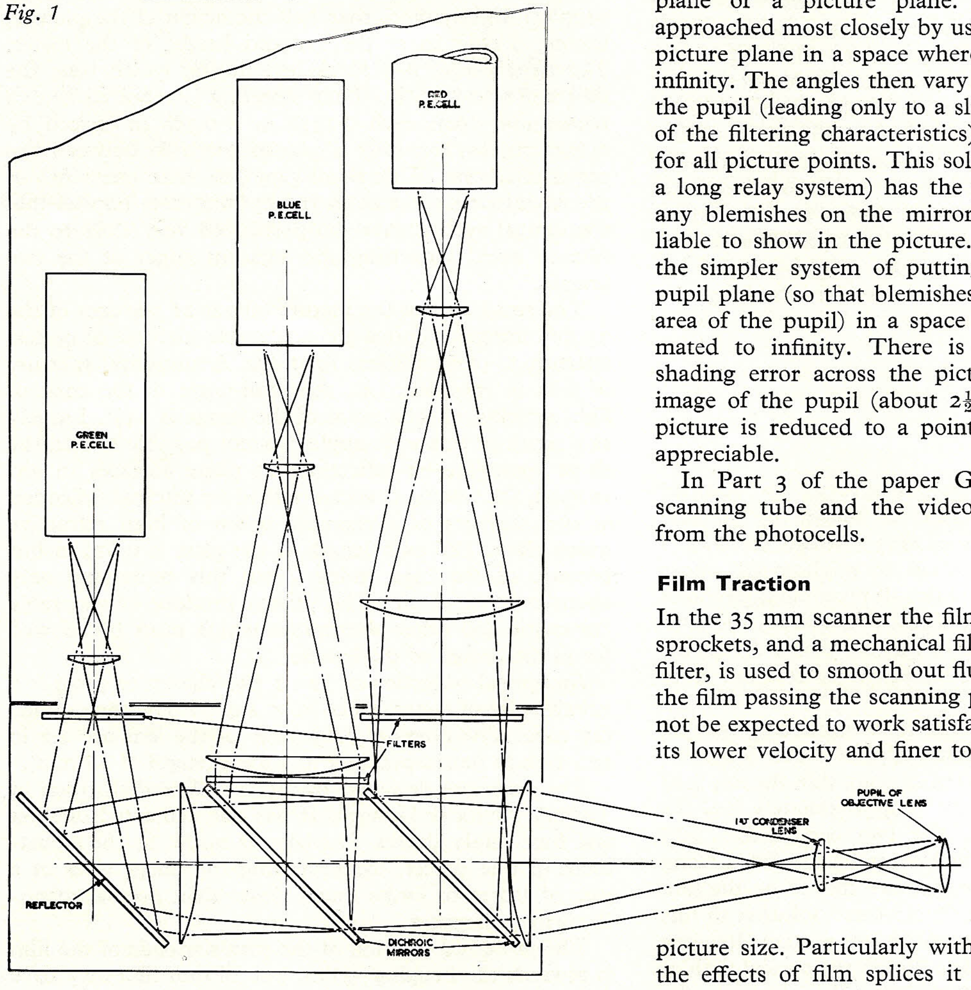

Fig. 2

DIAGRAM OF BEAMSPLITTER & CONDENSER SYSTEM

mentary negative lenses in front of the main lenses serve to extend the focus through to the other side of the film base. The supplementary lenses are switched in or out of position as required.

The lenses are used with a spacing of 1·08 in between their axes, and the resulting image spacing of 1·17 in is brought down to the required 0·1492 in by the internally reflecting prisms. As in the 35 mm scanner, the reflecting surfaces are slightly inclined to each other to tilt the images to fit them to the film which is curved to a radius of 3 in, and the lens apertures are made to appear coincident as seen through the film.

The condenser system (see Fig. 2) is designed to accommodate the dichroic mirrors required for colour operation (for monochrome operation the unnecessary parts are omitted). The colour splitting properties of dichroic mirrors are a function of the angle of incidence of the light and the spread of angle should be kept small by using large mirrors. In a repeating optical relay system, images of the aperture stop (pupil) and of the picture will appear alternately along the system, and there is a choice as to whether the dichroic mirrors should be near a pupil plane or a picture plane. Theoretical perfection is approached most closely by using the mirrors close to the picture plane in a space where the pupil is collimated to infinity. The angles then vary only for different points of the pupil (leading only to a slight reduction in sharpness of the filtering characteristics) and the effect is constant for all picture points. This solution (apart from requiring a long relay system) has the practical disadvantage that any blemishes on the mirrors are nearly in focus and liable to show in the picture. The present scanner uses the simpler system of putting the mirrors close to the pupil plane (so that blemishes are averaged out over the area of the pupil) in a space where the picture is collimated to infinity. There is theoretically some colour shading error across the picture, but by using a large image of the pupil (about 2½ in) the field angle of the picture is reduced to a point where the effects are inappreciable.

In Part 3 of the paper G. H. Askew describes the scanning tube and the video processing of the signals from the photocells.

Film Traction

In the 35 mm scanner the film is driven by conventional sprockets, and a mechanical filter, similar to a sound head filter, is used to smooth out fluctuations in the velocity of the film passing the scanning point. Such a system would not be expected to work satisfactorily for 16 mm film with its lower velocity and finer tolerances due to the smaller picture size. Particularly with regard to the duration of the effects of film splices it is desirable to control the movement of the film at a point as close as possible to the scanning point. (The present scanner uses the perforation situated 1·05 in from the centre of the picture being scanned.)

The solution adopted is to drive the film by means of two claws operating alternately with sufficient time overlap to provide continuous film movement. (4) The claws are, of course, working in the same line of perforations, one claw using the odd-numbered perforations and the other the even-numbered. Each time a claw has completed an operation it is retracted from the film and must be returned round the back of the still-operating claw to be re-inserted in its next perforation. In a plane section centred through the line of perforations the claws move round each other; their operating mechanisms are symmetrically disposed about the central plane.

Each claw is driven by mechanical linkages from two cams, one cam for the working traversal and return, the other cam for the retraction and insertion. Any desired two dimensional movement of the claw can then be produced by appropriate shaping of the cams.

Claw Changeover Principle

The uniform movement of the film required for most of the time, though very important, is a comparatively trivial requirement which might have been provided by a simple sprocket; where the cam operated claw mechanism excels over any known sprocket is in its ability to provide precise control over the changeover conditions from one perforation to the next.

Each claw drives the film for the duration of the two field scans of one picture. Towards the end of the second scan the other claw is being inserted in the next perforation and reaches its full depth of insertion 1 millisec before the end of the scan. It does not touch the edge of the perforation at this moment because it is spaced from the first claw by 0·303 in which is greater than the perforation pitch. However, the distance between the claws is closing in at a rate of 3 thou/millisec. (Both claws at this time are decelerating at the rate of 1 thou/millisec^2 and their relative velocity is 3 thou/millisec.) The relative movement continues for 3 millisec, when the claw spacing has diminished to 0·294 in which is less than the perforation pitch. At the instant when the claw spacing passes through the value corresponding to the prevailing perforation pitch, the second claw takes over the function of driving the film. The first claw has separated from the edge of its perforation when the time arrives for it to be withdrawn.

It should be noted that the operations are completely reversible in direction (assuming that the direction of the film tension is maintained) the function of the claws changing from "feed" in the forward direction to "hold-back" in the reverse direction.

The only effect of variable film shrinkage is to vary the instant of changeover, at the rate of 1 millisec of timing for 1 per cent shrinkage. Thus a generous range of shrinkage can be accommodated while still keeping the changeover within the field blanking interval.

The non-uniform motion of the claw lasts for a total of 3 millisec, and so overlaps the field blanking interval to affect the end of the second scan of one picture and the start of the first scan of the next picture. The magnitude of the effect (·0005 in) is negligible in terms of scan linearity, but sufficient, if not compensated, to disturb the interlacing of a few lines at the top and bottom of the picture. Accordingly a matching error is applied to the end of the first field scan and the start of the second field scan. The correction to the cam is quite small; to the uninitiated the cam might appear to have a manufacturing blemish in the middle of an otherwise smooth profile.

Apart from the small modification described above, the claw is required to move the film with a uniform velocity. The chosen velocity is ½ per cent less than the nominal 7½ in/sec.

Cam and Claw Mechanism *(see Fig. 3)*

The cams are edge type, with a profile varying from ½ in radius to 1½ in radius. The followers are ball bearings of ¾ in outside diameter carried on arms spring-loaded to the cams. In addition to the two cams for each claw, which are symmetrically disposed about the central plane of the mechanism, there is a fifth, centrally placed cam whose follower does not do any work but helps to balance the oscillating mass of the followers on the retraction cams. The five cams are mounted in fixed phase relation on a common driving shaft.

Each retraction cam has a "dwell" (i.e. constant ½-in radius profile) of 43 millisec. The film runs on a guide of 4-in radius, and during the cam dwell the claw projects through a slot in the guide to engage the film. The operating face of the claw is normal to the surface of the film guide and the claw moves about the centre of curvature of the guide to provide constant engagement with the edge of the perforation.

The claw is pulled down by a linkage from the traversing cam follower. Two fine adjustments are provided in the linkages to enable the relative velocity and position of the claws to be equalised in spite of inevitable small manufacturing inaccuracies.

Each normal operating claw has a companion "emergency" claw which enters the perforation two pitches farther down the film. The emergency claw is positioned so that it does not normally touch the edge of the perforation but it serves temporarily to drive the film if the normal operating claw fails to drive, e.g., because of a damaged perforation.

Cam Design and Manufacture

The cam profiles are determined by the required claw movement and the variable geometry of the mechanical linkages. The calculations are reasonably simple but very tedious, involving repeated "solution of triangles" to a high degree of accuracy. (This is a case where an electronic calculator would probably have saved time if one had been readily available; actually the calculations were performed with 7-figure trig. tables and a hand operated desk calculator.)

Accurate picture registration relies on, *inter alia*, the accurate profile of the cams. Quiet operation requires a good surface finish which calls for hardened cams finished by grinding. A surprising difficulty initially encountered was that there does not appear to be any machine commercially available for the manufacture of such cams and it became necessary to build a special machine working on the principle of copying from a five times full size master cam.

The profile data for the traversing cam was put in the form of a large number of circular arcs which enabled the brass master cam to be cut on a Studer profile miller. The master for the retraction cam, less critical on absolute profile dimensions but more critical on smoothness of large acceleration changes, was made on a dividing head on a normal milling machine as a large number of cuts subsequently blended by hand finishing.

On the cam grinding machine the master and the workpiece are mounted on two parallel spindles which are required to turn in exact synchronism. If the spindles were provided with similar cranks linked only with a single connecting rod the drive would fail every 180°. To get over this, a third spindle and crank are provided and the three cranks are linked with a triangular connector. All three spindles then turn in unison when one of them is driven at a few revolutions per minute by a geared-down motor.

The compressed-air-driven grinding wheel is carried one-fifth the way along a pivoted arm whose outer end has a follower (five × the diameter of the grinding wheel) rolling on the master cam. The geometry is such that as the master and workpiece rotate, the grinding wheel is guided to produce a reduced-scale profile on the workpiece.

The grinding wheel assembly is slowly traversed along the direction of the axes. The grinding wheel is dressed in a number of small steps of increasing diameter, so it takes a series of cuts, the final largest diameter producing the finished dimensions.

The blanks are rough milled slightly oversize in the soft condition so that, after hardening, only a small amount of metal remains to be removed by grinding. (Fig. 4 shows finished cams.)

Fig. 3

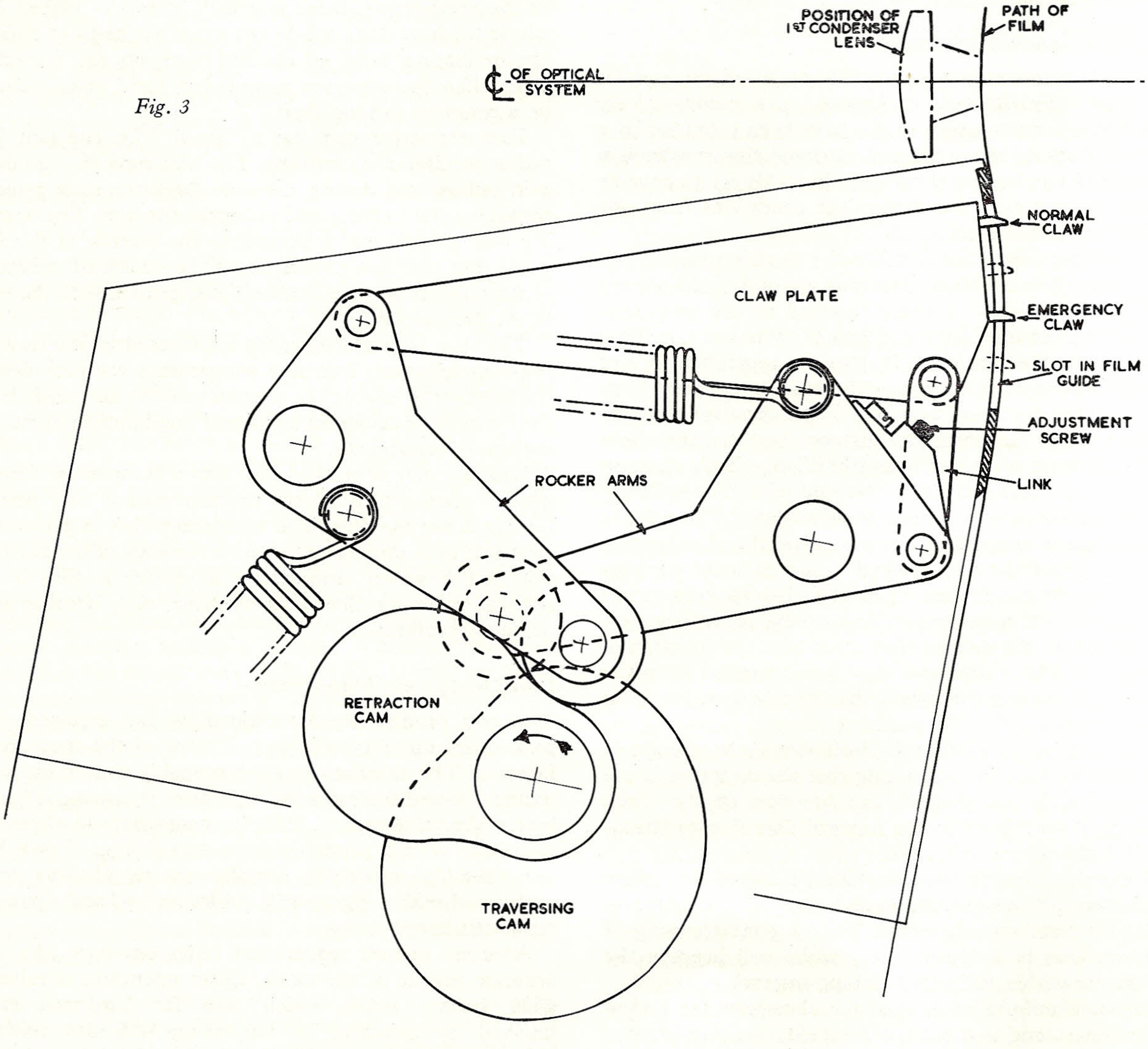

DIAGRAM SHOWS ONE HALF OF CLAW MECHANISM ONLY

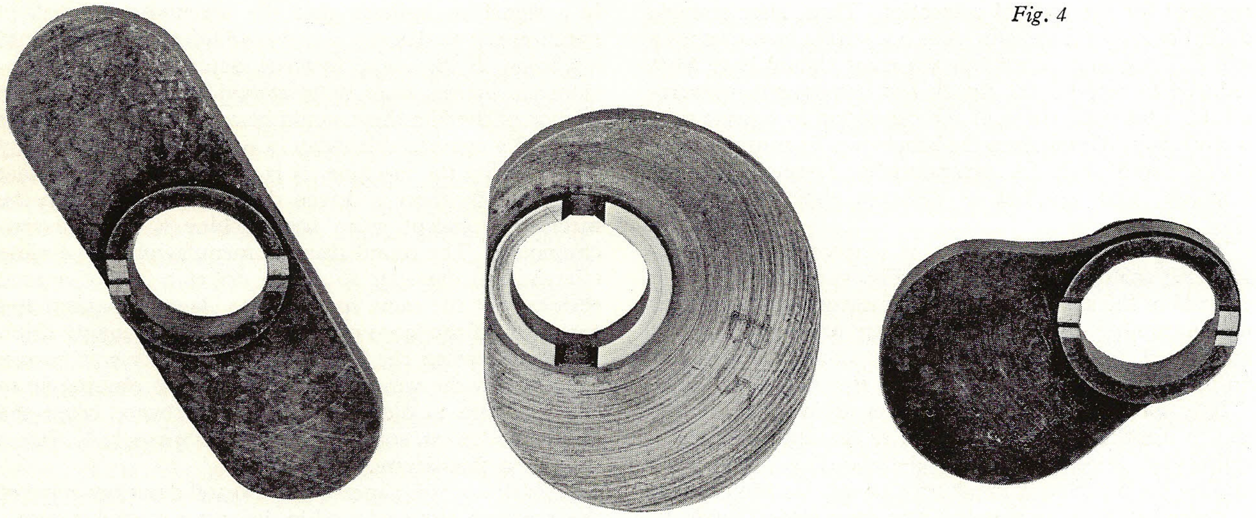

Fig. 4

Motor Speed Control

The camshaft rotates at 750 rpm (each rotation = 80 millisec) and, to achieve a steady picture, the rotation must be accurately synchronised to the television field scanning system. Any timing error of synchronising is directly translated into vertical shift of the picture, 12 µsec producing $\frac{1}{8}$ line on the 405 line system (8 µsec for $\frac{1}{8}$ line on 625). Picture steadiness is one respect in which it is practicable to improve on the 35 mm machine whose performance is complicated by the mechanical filter.

The required accuracy demands the use of some form of closed-loop servo comprising means for detecting small errors and applying corrections to the driving motor to reduce the errors to zero. The most important factor in preventing the growth of errors is the alacrity with which the errors can be detected and the appropriate corrections applied. The shortest time scale for these operations is fixed by the nature of the reference television field synchronisation pulses; an accurate measurement can be made of the error of the motor against each pulse, but the measurement can be repeated only at 20 millisec intervals. This sets the time scale for the correcting information which can be usefully changed only at 20 millisec intervals.

The state of synchronisation has two degrees of freedom—there may be a velocity error and a position error. Two successive measurements are required to determine the velocity error, and the next two pulse intervals are

Fig. 5

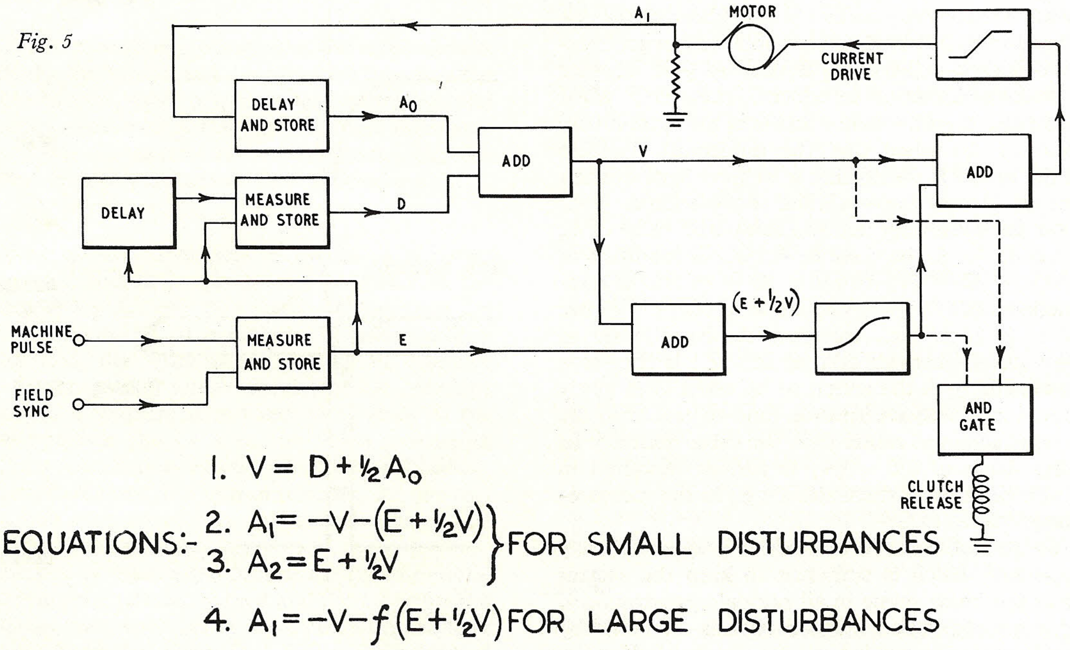

EQUATIONS:-

$$1.\ V = D + \tfrac{1}{2}A_0$$

$$\left.\begin{array}{l} 2.\ A_1 = -V - (E + \tfrac{1}{2}V) \\ 3.\ A_2 = E + \tfrac{1}{2}V \end{array}\right\}\text{FOR SMALL DISTURBANCES}$$

$$4.\ A_1 = -V - f(E + \tfrac{1}{2}V)\ \text{FOR LARGE DISTURBANCES}$$

FUNCTIONAL BLOCK DIAGRAM — MOTOR SERVO

required for the applied correction. Thus, after a single disturbance to the system, three successive measurements will indicate some error but the error should have been reduced to zero for the fourth and subsequent measurements. This completion of the correction in a finite time is obviously different from the behaviour of a continuously-acting servo with its exponentially damped transient response, and requires a different design approach. (Fig. 8.)

The correcting information is derived by a suitably arranged analogue computer (see Fig. 5) whose input data consists of the succession of error measurements together with a number of items of immediate past history which are stored in the computer. The stores are brought up to date on receipt of each new error measurement.

It is convenient to express the error in microseconds and to use the 20 millisec period as the unit of time for expressing velocities and accelerations. A +ve error implies the machine is in advance of the synchronisation.

Immediately on receipt of a new error measurement E, comparison with the stored value of the previous measurement will indicate a change D, which represents the mean velocity error during the past interval. If some acceleration (stored as A_0) was in use during the interval the velocity must have varied from $D - \frac{1}{2}A_0$ to $D + \frac{1}{2}A_0$, thus the present velocity $V = D + \frac{1}{2}A_0$. It is readily shown that, in terms of V and E which together define the state of the system, the values A_1 and A_2 of accelerations to be applied in two consecutive periods are given by ($A_1 = -V - (E + \frac{1}{2}V)$ and $A_2 = E + \frac{1}{2}V$). The computed value of A_1 is applied to control the motor current (and also put into storage to become the A_0 for the next calculation).

The correction to be applied on receipt of each new error measurement is obtained by the repeated application of the formula for A_1 only; the value of A_2 is not used directly since it always applies to a period ahead of the one under consideration. Though never applied as an acceleration, the computed value of A_2 is used to give advance warning if an overload is imminent. Invariably when starting, and also on other rare occasions, the system may be so violently disturbed that the maximum available torque of the motor is insufficient to achieve synchronism in two periods. Denote the maximum acceleration as $\pm A$. To cater for the possibility that the computed value of A_2 may be outside $\pm A$ the formula for A_1 is modified to $A_1 = -V - f(E + \frac{1}{2}V)$ where $f(E + \frac{1}{2}V)$ is a non-linear function of $E + \frac{1}{2}V$. (The slope of $f(E + \frac{1}{2}V)$ has values of 1, $\frac{1}{2}$, $\frac{1}{3}$, $\frac{1}{4}$, etc., changing discontinuously as $(E + \frac{1}{2}V)/A$ passes through 1, 3, 6, 10, etc.) If the value of A_1 lies outside $\pm A$ the action to be taken is to apply the maximum available acceleration (and to record in the store the value achieved rather than the value desired). In practice the shape of $f(E + \frac{1}{2}V)$ is further modified to allow for non-linearities which arise, e.g., in the measurement of large values of E.

In the actual machine the value of A is approximately 100 μsec/period^2 which is sufficient to keep the system operating in the linear mode in all normal circumstances, even, e.g., when the field synchronisation is disturbed by a "gen-lock" operation carried out by slipping half a line per field.

A facility readily provided by the motor control circuit is a signal to indicate that the machine has attained synchronism so that the sound head filter may be put into operation. If the sound flywheel, necessarily having considerable inertia, were to be started and stopped by the friction of the film there would be a risk of abrasion of the film and a considerable delay in achieving sound stability after starting the machine. It is, therefore, arranged that the sound flywheel is driven through a clutch from the mechanism except when the machine is running synchronously. The sound drum is manufactured to a close tolerance on diameter so that it drives a film of normal shrinkage at the same speed as the claw mechanism and sprockets. If the loops on each side of the scanning drum are correct when the film is stationary they will remain substantially the same while the machine is running up to speed. There is then very little disturbance when the clutch is released, and stabilised sound is available almost as soon as the picture.

In Part 2 of this paper D. W. Boston describes some of the transistor circuitry used in the motor control system.

Driving Motor

Mounted directly on the camshaft is a large flywheel, storing approximately 100 joules at 750 rpm which serves to reduce phase error due to cyclic load variation of the cam and claw mechanism to approximately 3 μsec. This error, being cyclic, can be compensated by suitable adjustments and plays no further part in picture unsteadiness. A larger flywheel would have been helpful in some respects but would have required excessive torque for starting and stopping.

Fig. 6

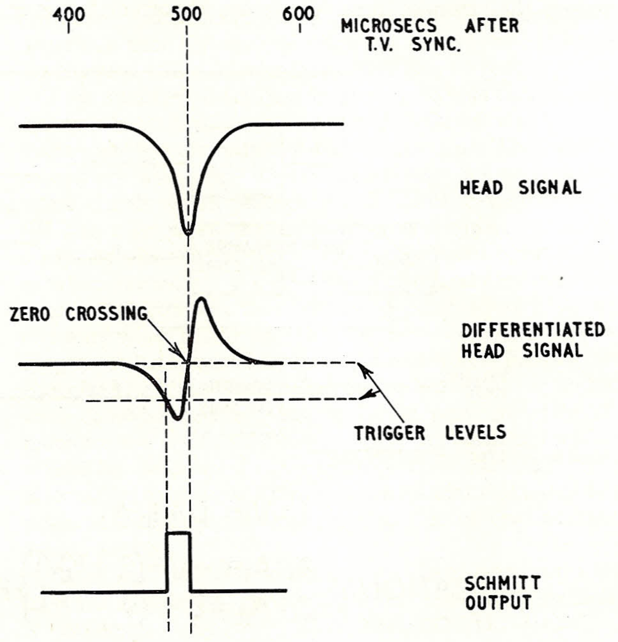

HEAD SIGNAL WAVEFORMS

To avoid the use of gearing, the motor drives the flywheel directly, through a coupling which is torsionally rigid but which allows for slight misalignment.

The D.C. motor has constant field excitation, the armature being designed to operate at a voltage (about 60 volts) convenient for direct drive from transistor circuitry. Armature reaction compensating windings reduce the armature inductance, hence the circuit time constant, to a small value so that desired changes of current can be applied without significant delay. The transistors control the current over a range of 2 amp (± 1 amp with respect to the mean). Extra current for starting is provided by a change of power supply connections (6).

Phase Reference Pulse Generator

Measurement of the phase error requires the generation by the mechanism of pulses suitable for comparison with the television field synchronisation pulses. To obtain sufficiently defined pulses, four sharp-edged steel polepieces are mounted in the periphery of the flywheel which carries them past a magnetic pick-up head, with a velocity of 250 in/sec at a distance of ·005 in. Magnetic flux, provided by a neighbouring permanent magnet and concentrated at the sharp edge of each polepiece is swept across the gap of the pick-up head to generate a pulse of several volts. This pulse, of even symmetry, has a total width of the order of 100 microseconds but a very sharp tip (Fig. 6.). Differentiation of this pulse produces a waveform of odd symmetry with a fast zero crossing. A Schmitt trigger is operated by the initial excursion of the waveform and reset as the waveform passes through zero. The resetting of the Schmitt indicates, consistently within a fraction of a microsecond, when each polepiece crosses the pick-up gap.

When initially set up, errors in the 90° spacing of the polepieces round the flywheel will result in timing errors which will be evident in the waveforms observed in the motor control circuits. Interpretation of these waveforms indicates the corrections required in the positions of the polepieces, which are provided with fine screw adjustments to enable the corrections to be made.

The four polepieces are so phased relative to the cams that the pulse timing corresponds to the centre of the changeover interval rather than with the field synchronisation which occurs at the start of the interval. (The $\frac{1}{2}$ millisec difference is allowed for by an offset in the error measuring circuit.) In this way the timing is made the same for forward and backward running.

Gearing to Sprockets, etc.

The motor drives the cam mechanism directly, and also provides a drive, through gearing to four film sprockets, the sound flywheel clutch and the shutter. None of these drives is critical, but the use of high quality gearing assists in preserving quiet and steady operation. The straight spur gears are enclosed, the lowest dipping into oil which becomes transferred, contact to contact, to all gears. An exception is the final drive to the shutter, whose shaft is almost at right angles to the others. This load is very small, and is satisfactorily transmitted through bevel gears of Delrin, without lubrication.

Film Spooling

Because of the small picture size (compared with 35 mm) 16 mm film is more sensitive to damage, such as strained perforations which could result from excessive tension. Similar lengths of film (up to 2,400 ft) require similar spool sizes, yet tension must be taken by sprocket teeth working in only a single line of perforations. Fortunately, however, most of the potential difficulties vary with the square of the film velocity; this factor is decisive, and 16 mm spooling is simpler than 35 mm.

Each of the two spools (see Fig. 7) is mounted directly on the spindle of a torque motor, whose torque is determined by the electrical supply to the motor. Both motors are energised, to supply braking torque for the feed spool and driving torque for the take-up spool. This arrangement readily provides for reverse running, for which it is necessary to make only small changes of torque to allow, mainly, for changes in the direction of frictional effects.

No adjustment of torque is necessary for different spool diameters provided that the diameter exceeds 4 in. The torques can be switched (manually) to lower values for use with smaller spools having cores from 4 in down to 2 in.

Between each spool and the adjacent sprocket the film tension is cushioned by a loop absorber, suitably spring-loaded and damped.

When the machine is stopped the torque motors are de-energised and brakes are applied to the spools to prevent loss of film tension.

Sprockets and Film Tension

One sprocket is driven by the film to operate the film footage indicator and there are four sprockets driven by the mechanism. The first driven (feed) sprocket pulls the film from the feed spool, the second holds back the tension of the film entering the picture gate and claw mechanism, the third (feed) pulls the film from the sound head and the fourth holds back the tension of the take-up spool.

The claw will fail to control the film unless there is a positive pressure between the claw and the edge of the engaged perforation, so the film tension on the picture side is required to be somewhat higher than on the sound side. It was a simple matter to apply the appropriate tensions by means of rollers carried on spring-loaded arms, but it took a long time to discover that the inertia of the rollers was contributing to an unexpected effect. Small cyclic velocity fluctuations, arising partly from the tooth-by-tooth disengagement of the film from the hold-back sprocket and partly from the claw change-over process, would be expected to be small enough to be absorbed by the compliance of the film loops, but it transpired that the inertia of the rollers and the compliance of the film conspired to produce a resonant system which selectively amplified one component of the fluctuation. The resulting effects were very puzzling until the true cause was established; when it was found that the trouble could be cured quite simply by applying a small amount of viscous damping to kill the resonance.

Reverse Running

Part of the vertical scan is provided by the movement of the film, so if the direction is reversed, and the other part,

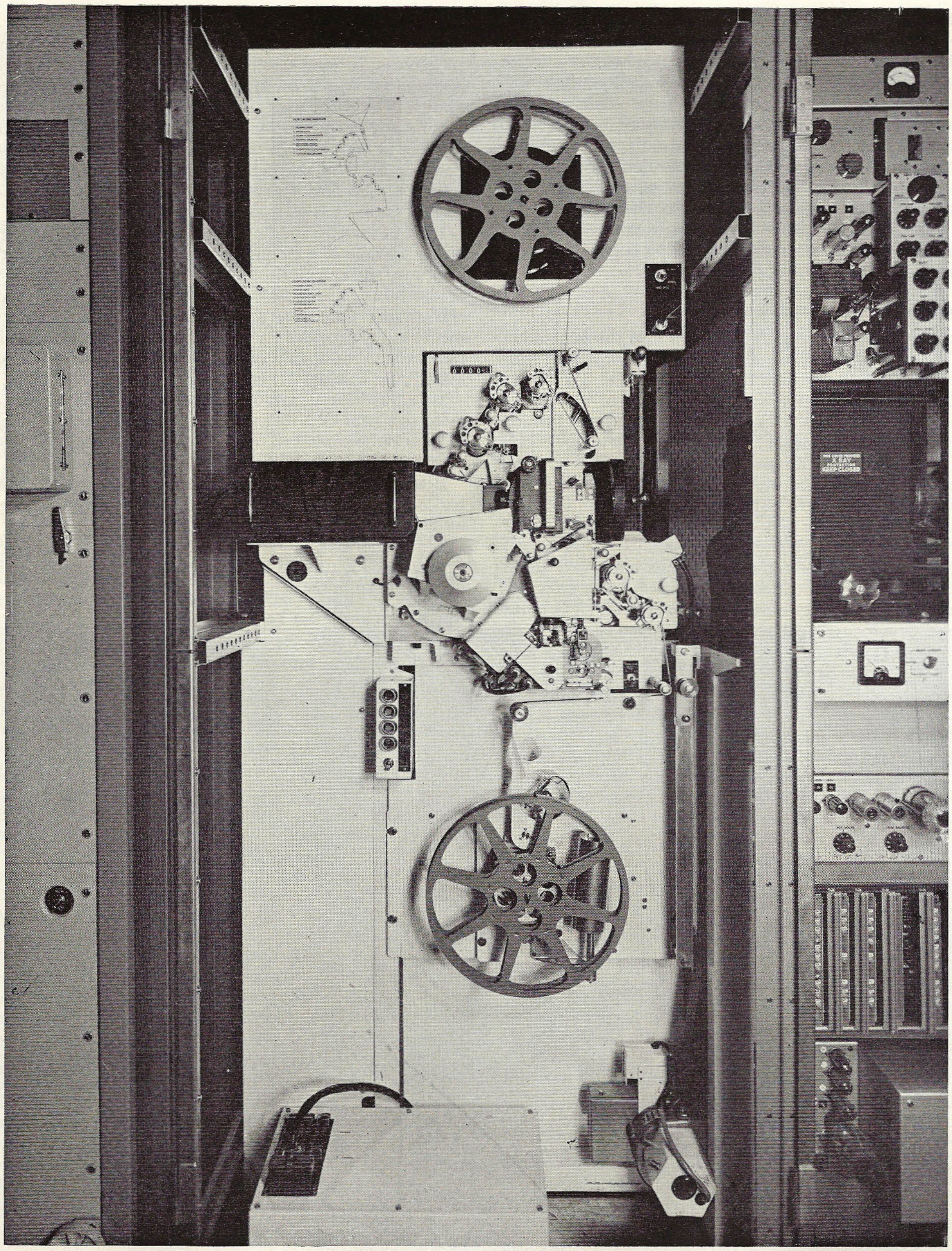

Fig. 7

i.e., the field scan on the cathode ray tube, is also reversed, the machine will produce an inverted picture. This picture is only used for monitoring purposes so its quality is not very important, but care must still be taken to avoid damage to the film.

In order to maintain the appropriate feed and hold-back conditions on each sprocket of a pair, the loop of film between them has its tension increased when running in reverse, to a value higher than the tension on each side of the pair. The claw mechanism, as already indicated, works well in reverse using the same tension differential, but to allow for the changed direction of film drag due to friction and elastic hysteresis, the tension in the sound head must be further reduced for reverse running. The tension changes are effected by solenoids controlled by the motor command system.

Acknowledgments (Part 1)

The author would like to mention four colleagues for their valued assistance in the early stages of the specialised developments described in Part 1. A. G. Oxbrow (mechanical design of the claw mechanism and associated parts), Harry Royce (assembly of prototype mechanism in the model shop), K. C. Macleod (general project engineer), R. Loveday (design and operation of cam grinding machine).

Part 2

by D. W. Boston (Member)

Servo Computer Circuitry

Part 1 of this paper described the basic philosophy of the Servo and Computer. Part 2 deals with some of the methods used to obtain and process the Error Signals and provide the correcting current in accordance with the theory outlined in Part 1.

Fig. 5 in Part 1 showed a general schematic of the Servo. At the bottom left hand corner there is a block designated "Measure and Store". The inputs to this block are designated "Machine Pulse" and "Field Sync" and before the timing difference between these signals can be measured they must first be rendered in a form suitable for measurement. The normal timing difference between the two signals is about 500 microseconds but as it has been indicated in Part 1 it is desirable to attain accuracies of the order of a few microseconds.

The maximum difference that can arise between the signals is half a period (10 millisec), and such displacements do sometimes arise, e.g., when starting, so that it is desirable to measure differences of less than 1,000th part of their maximum value. In many Servo systems the mean error is made half the maximum error so that there is no change of sign. To adopt such a system would involve holding reference potentials to one part in a thousand. In the system adopted the mean error when running is kept to a low value but this necessitates that the error may be of either positive or negative sign.

To obtain an error signal with sign reversal it is convenient to provide signals at either of two outputs according to whether the machine pulse or the field sync pulse comes first. If the machine pulse comes first the signal will appear at one output which will be referred to as the positive timing signal. If the machine pulse follows the field sync pulse the signal will appear at another output which will be referred to as the negative timing signal.

In the Error Detector, to be described later, the Positive Timing Signal switches in a positive current source and the alternative Negative Timing Signal a negative source thereby providing signal reversal.

It is also necessary to provide two consecutive Clock Signals to control subsequent operations within the computer.

Fig. 8 is a block schematic showing in greater detail how these four signals are derived.

Starting at the top left hand corner the flywheel is shown in schematic form carrying the pole tips in the vicinity of a magnetic head. Rotation of the flywheel causes the pick up head to generate pulses. These are amplified and fed to the Schmitt trigger as has already been described (Part 1).

The signal from the Schmitt is fed to bistable trigger 1.

The reference field sync pulse is clipped and fed to bistable trigger 2.

The signals from the two bistables are fed to AND gates 1 and 2 respectively while both signals are fed to AND gate 3. In operation the Positive Timing Signal is generated by AND gate 1 if the Machine signal comes first and the Negative Timing Signal by AND gate 2 if the Field Sync signal comes first. As soon as the second of the two bistables operate AND gate 3 inhibits both AND gates 1 and 2. It, thereby, terminates the existing timing signal and prevents any signal from the other AND gate. Thus a timing signal is produced at AND gate 1 or AND gate 2 with a duration proportional to the time elapsed between the two signals from the bistables.

The signal from AND gate 3 is fed to a monostable trigger with a pulse duration of 9 millisec. After this delay the bistables are reset via AND gate 4. By this means, the pulses are paired off and the rest of the servo left undisturbed for an interval so that various computing operations may be completed.

Formation of Clock Signals

A second monostable with a pulse duration of 4 millisec operates in conjunction with the previous monostable (9 millisec) to generate clock pulses. The outputs of the monostables start simultaneously, the 4 millisec pulse providing Clock pulse 1, while the remainder of the 9 millisec pulse, via AND gate 5, provides Clock pulse 2, of 5 millisec duration.

The Error Detector

The conversion of the two timing signals into the error

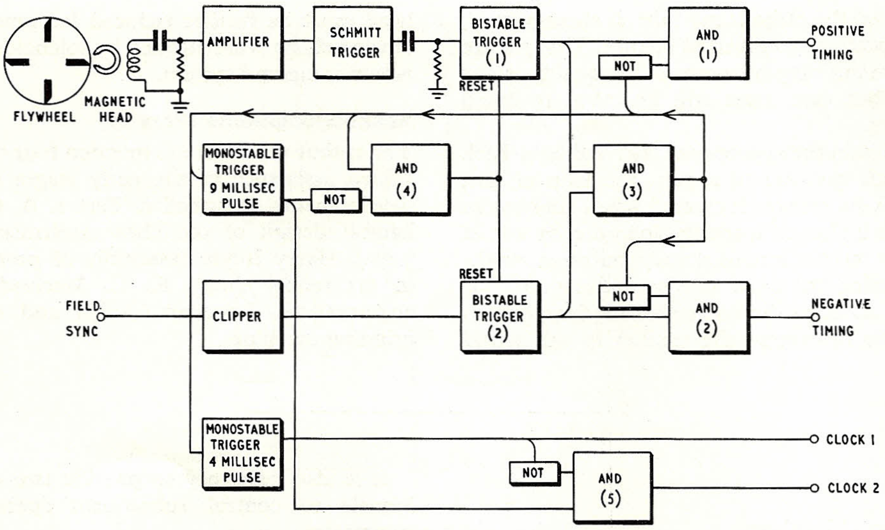

Fig. 8

SERVO TIMING LOGIC

signal is the function of the Error Detector. This unit completes the function of "Measure and Store" referred to in the input block—Fig. 5.

Fig. 9 shows the Error Detector in Block Schematic Form. The two alternative positive or negative timing currents are supplied by the transistor switches S1A connected to the positive line and S1B connected to the negative line, each fed via a resistor of approximately 10K ohms adjusted to make the initial time constant 20 millisec when charging the capacitor C1 (2μF).

By operating the switch S1A from the positive supply and S1B from the negative supply, sign reversal is produced so that C1 is charged in a positive or negative direction according to the order of the timing signals.

During Clock pulse 2 the capacitor C1 is discharged via the transistor switch S1C so that at the beginning of each period it is discharged ready for the next measurement.

In the normal operation of the Error Detector when the machine is running in sync the head signal lags the Field Sync by 0·5 millisec. During this period S1B will be closed and C1 will be charged approximately linearly to −0·25 volts. (This voltage is proportional to the time delay and would be positive if the delay were reversed.)

When the second signal is received S1B opens and Clock pulse 1 causes transistor switch S2 to close so that the voltage on C1 is copied by the Capacitor C2 via the buffer amplifier B1. This amplifier has low impedance output so that the new voltage appears on C2 with negligible delay.

After 4 millisec the Clock 1 signal ceases, S2 opens and C2 is left holding its charge while C1 is discharged ready to receive the next timing signal.

The voltage on C2 is made available to the computer via the buffer B2 which is similar to B1. Owing to the

Fig. 9

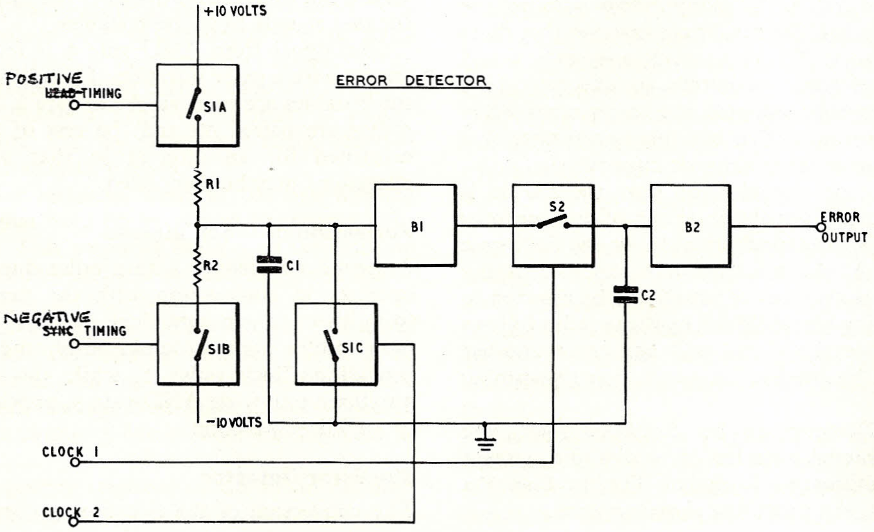

high input impedance of the buffer, C2 holds its charge and the output potential remains constant during each period of 20 millisec, a new value appearing with the arrival of each new machine head signal. The voltage on C2 as reproduced by the buffer B2 is referred to as the "Error Signal" or "E".

The delay of 0·5 millisec greatly exceeds the normal error modulation when the machine is running and usually sign reversal occurs only when pulling into sync after starting. On the other hand it should be noted that the 0·5 millisec offset is very much less than the 10 millisec that would be necessary if sign reversal had to be avoided.

Fast NPN transistors are used in the logic circuits shown on Fig. 8. In the Error Detector itself switching times for S1A and S1B are less than 1 microsecond.

Another feature of the Error Detector is that the condenser C1 is charged exponentially from a 10 volt source with a time constant of 20 millisec. For small signals as when normally running in sync the charging of C1 is linear, but for large errors the Error Voltage is reduced, thereby reducing the voltage to be handled by the subsequent circuits. The design of the Error Detector is simplified in that the need for the constant current feed often used with asymmetrical circuits is avoided.

Difference Unit

Reverting to Fig. 5 the next unit to be considered is represented by the pair of blocks designated "Delay" and "Measure and Store". These functions are performed by the blocks shown in Fig. 10, here referred to as the Difference Unit.

In this unit a capacitor C1 couples the input E via the high input impedance buffer B1 to the Amplifier A with a gain of five times and low output impedance. The output of the Amplifier is fed to the "Store" S2, C2, B2.

During the Clock pulse 2 in the previous period S1 is closed. By means of this feedback fixed potentials are established at the amplifier terminals during this interval. The voltage on the capacitor C1 is, therefore, proportional to E and this is carried forward to the next period. If a new value of E arrives with the next Clock pulse 1, which also closes S2, the change in E is coupled via C1 amplified by A five times and stored on C2. Thus the charge on C2 is five times the Difference D in the Error E, between the present and the previous period. Since the amplifier is phase reversing the output is −5D.

Acceleration Delay and Store

The next unit to be considered is the Delay and Store for the acceleration signal shown on Fig. 5.

The two Stores in Fig. 11 fulfil this function. The first S1, C1, B1, is charged during the Clock pulse 2 of the preceding period with the previous acceleration value A1. This is stored on C1, till the present period, when during Clock pulse 1 the voltage on C1 is read by the Store S2, C2, B2. During Clock pulse 2 C1 is charged to the new value of acceleration.

During each cycle of the process, the second stage is providing a measure of the acceleration previously applied. The first stage measures and holds that currently in use and is copied by the second stage during the next period.

Circuit of Store

As an example of the methods used Fig. 12 shows the circuit of one of these stores. A store comprises a switch, a capacitor and a buffer.

The switch comprises two PNP silicon transistors connected in parallel so that whichever way the current flows one is being used in the normal manner. A third transistor provides the switching current which, owing to the current gain of the transistors, can be much lower than the current to be switched. The switching current is drawn from the input source which should be of low impedance but the output leakage of the switch when switched off is very low being only a few nanoamperes.

The switching is used to charge a capacitor of 2μF, the output of which is "read" by means of the buffer amplifier. In the buffer amplifier the first transistor TR4, is a high-gain NPN Silicon Transistor (2S502) which operates at an input current of less than 0·1 microamp.

The three transistors TR4, 5, 6, provide a current gain of over 50,000 and, due to the diode D1, have only a small D.C. temperature drift.

Since the output collector is coupled by the low impedance of the diode to the input emitter, the overall gain is approximately unity and the input impedance is very high; the input current remains constant at some value less than 0·1 microamp.

Should the clock pulses disappear when the machine is running, the buffer will discharge the condenser to a negative potential which in the case of the Error Detector will cause the machine to increase in speed. The Resistance R5 of 100 megohm connected to the +10 V line is used in this case to cause the buffer to drift positively.

Amplifiers

The units so far considered comprise three stores with three outputs −Ao −D and E. These have to be combined in the proportions laid down in the equations and amplified to yield the specified acceleration.

The combining is carried out by means of D.C. amplifiers designated "ADD". These are typical operational amplifiers producing phase reversal and including a feed back resistor from the output to the input. The sources are fed in through series resistors and owing to the use of high open loop gain the actual signal is very small so that the output voltage is proportional to the feed back resistance and the various input voltages are proportional to the associated source resistances.

The "ADD" amplifiers consist of two long-tail pair stages in cascade, the first pair comprising two NPN Silicon transistors and the second pair two PNP Silicon transistors. The use of complementary stages facilitates the equalisation of input and output potentials.

In the non-linear amplifier a biased chain of diodes is added in the feed back path and adjusted to approximate the specified characteristic. In this connection it should be mentioned that the arrangement shown in Fig. 5 is simplified and in the actual arrangement used the development of the non-linear characteristic involves an additional limiting amplifier.

The output of the final adder is fed to a power amplifier with the armature in the final collector circuit so that the motor is fed at constant current. The power amplifier is

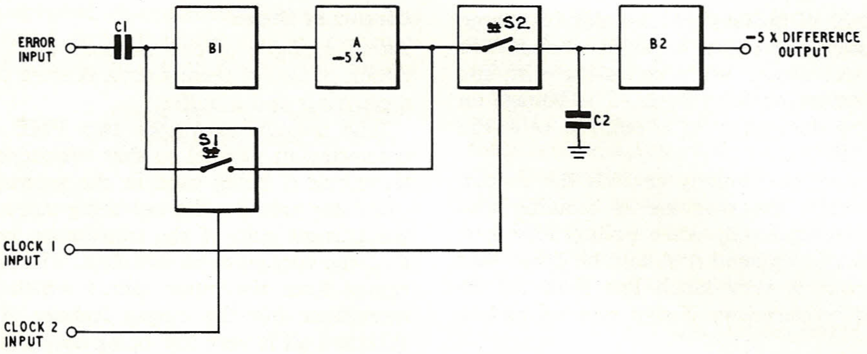

Fig. 10

DIFFERENCE UNIT

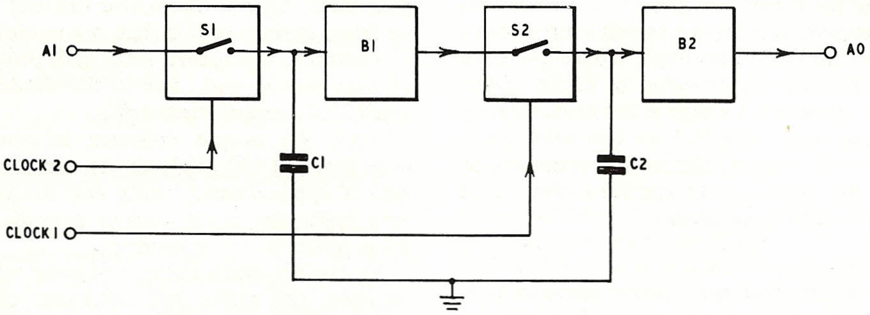

Fig. 11

ACCELERATION DELAY UNIT

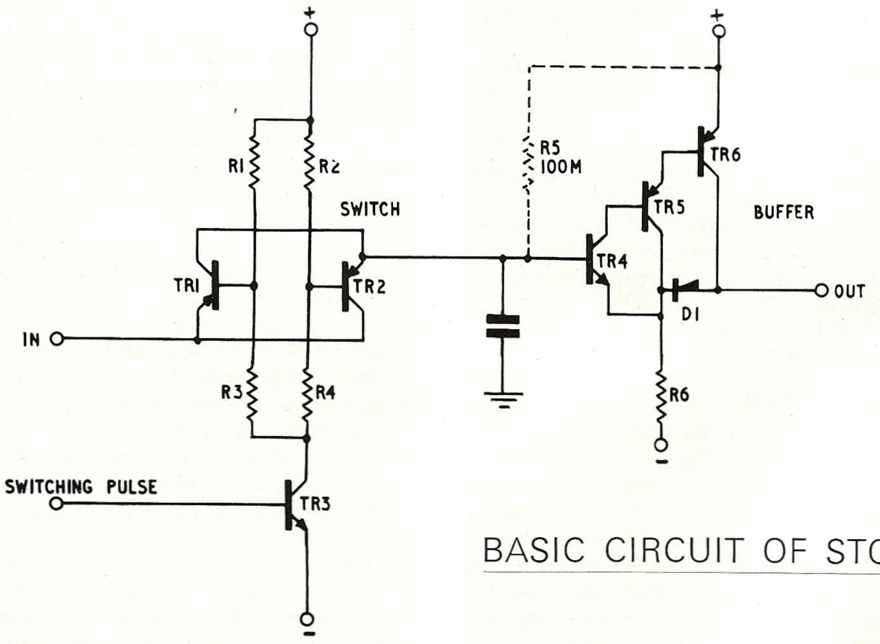

Fig. 12

BASIC CIRCUIT OF STORE

arranged to limit at 2 amp.

The output transistor is a PNP Germanium transistor so that a negative sign for the input voltage provides an increase in acceleration.

Performance

In order to apply the current gains within the computer the acceleration of the motor must first be measured. This measurement can be made by a step function test.

Current, less than the motor current, is switched onto the motor by a separate constant current source in parallel with the servo. This test current is switched in via a transistor switch, which is made to operate at the beginning of a new measurement, i.e., with the second of the two incoming timing signals. The test current is maintained at a constant value for a sufficient number of periods for equilibrium to be obtained when it may be switched off. The switching of the test current may synchronise the sweep of an oscilloscope so that the various signals from the servo may be displayed repetitively.

In the first period, following the application of the test current, the motor is accelerated by the change in current and as the servo will not start correcting until the following period the D signal observed at the beginning of the next period will enable the acceleration to be calculated.

Having measured the acceleration the gains may be calculated from the expression $A_1 = -V - (E + \frac{1}{2}V)$.

When the calculated gains are applied the performance of the servo may be checked by the same method. In this case the servo acts to correct the error in current caused by the externally applied test current since the mean load current has not altered. This it does in the next two periods.

It should be noted that the servo has a finite gain, there being no integration, and this change in the mean current supplied by the servo will require a small change in the Error Signal.

When running normally the change in load is small, and it is not necessary to correct these errors.

Another method of testing is to switch a time delay in the incoming field sync signal. A special test signal generator was built that could switch two differing delays for alternate sweeps of an oscilloscope. This device was used to test the servo both in the linear and non-linear region. Changes in the delay of up to 8 millisec may be switched. Such large errors normally only occur when starting and the up-to-speed relay circuit connects the motor to the servo when there are phase or velocity errors.

Construction

All the units in the servo are transistorised and mounted on seven plug-in cards contained on a single 19 in panel 8¾ in high. It contains its own transistorised power supplies.

Acknowledgments (Part 2)

The author wishes to acknowledge the guidance he has received from T. C. Nuttall and G. H. Askew.

For the benefit of anyone attempting to compare Fig. 8 with the circuits actually used, it should be pointed out that this while still correctly illustrating the principles involved, has been modified in detail for greater clarity of presentation

References

1.	T. C. Nuttall	The development of a high quality 35 mm film scanner. Proceedings I.E.E. Vol. 99, Part IIIA, No. 17, 1952, p. 136.
2.	Twin lens system	Brit. Pat. 510530 (1938).
3.	Moving shutter	Brit. Pat. 676907 (1950).
4.	Claw mechanism	Brit. Pat. 881539 (1959).
5.	Motor control servo	Brit. Pat. appl. 16130/63.
6.	Starting power supply	Brit. Pat. appl. 33201/64.
7.	G. H. Askew	Photocell gain control. Brit. Pat. 850081.
8.	H. A. Wheeler	Wideband amplifiers for television. Proc. I.R.E. 1939, 27, p. 429.
9.	T. C. Nuttall	Internal memorandum July 1955.
10.	T. C. Nuttall	Some aspects of television circuit technique. Journal T.V. Society. 1949, 5, p. 257.
11.	W. L. Brewer, J. H. Ladd, J. E. Pinney	Brightness modification proposals for televising colour film. Proc. I.R.E. 1954, 42, p. 188.
12.	Spall latching device	Brit. Pat. appl. 33202/64.

Part 3

By G. H. Askew

The Cathode Ray Tube

The flying spot scan is produced by a Cintel cathode ray tube type C212PIF, having a high definition triode gun and run at a constant cathode current. The tube has an optically flat face of 7 in diameter with an aluminised screen of zinc oxide phosphor similar to the E.I.A. grade P.24.

The quality of the final picture depends to a large extent on the c.r.t. screen, particularly the amount of useful light energy radiated. Random noise in the picture originates at the photocell cathode, and is therefore lessened by the increased light output. It is also reduced by shorter afterglow, for two reasons. First, because less correction is needed. Second, because even when corrected there remain streaks of additional noise after a white to black transition. For these reasons a blue galenite phosphor is desirable. This is similar to the very short persistence grade P.16, but having greater output with a longer wavelength peak.

However, the choice of phosphor is further limited by the requirements for scanning colour films, even when a monochrome picture only is desired, and a green zinc oxide phosphor must be used. Moreover, the screen persistence must not vary appreciably over the spectrum, as is likely to occur if more than one phosphor component is used. A typical spectral characteristic (Fig. 13) shows that energy is radiated throughout the visible spectrum. Output at the red-end is still rather limited and further development is desirable to broaden the characteristic up to 650 millimicrons.

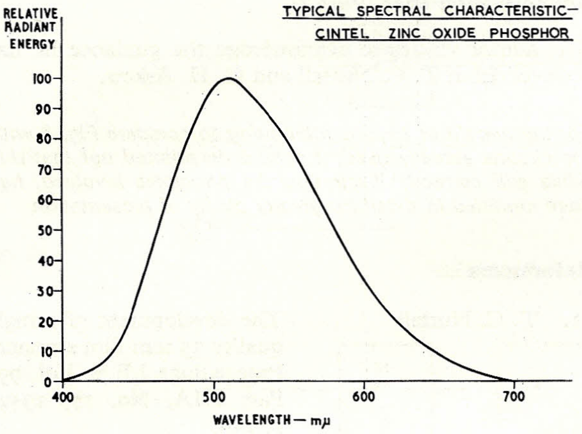

Fig. 13

Zinc oxide phosphors show considerable saturation with increased beam current (Fig. 14) and have an afterglow which is not only longer than that of galenite but also varies with current density. For these reasons, some care is necessary to obtain a consistent focus over the scanned area. Focus and deflection are magnetic, and dynamic focus is provided in both line and field directions. The tube is operated at 30 kV anode voltage and 300μA beam current, with cooling of the face assisted by a blower.

Recent tests have shown that improved zinc oxide phosphors can be made which result in a better signal/noise ratio at the telecine output. This is particularly significant for the transmission of colour pictures by band sharing, where high-frequency noise in the luminance signal is decoded by the chrominance circuits producing the so called "parc" noise.

The C.R.T. Coils and Supplies

The scanning tube is mounted with its coils and magnets in a cradle which is designed so that a rapid change of assembly may be effected. Axial and transverse movements provide for optical focusing and horizontal framing.

The c.r.t. is centred in a paxolin tube which carries the focus and deflector coils, each mounted to allow the necessary positional adjustments. The beam from the gun is centred in the coils with an adjustable magnet on the neck of the tube near the base, by observing the picture movement as focus is varied.

The tube and coils are driven by stabilised supplies as outlined in the block diagram of Fig. 15. Beam current is controlled by a grid-cathode circuit incorporating a form of flyback suppression which provides tube protection (d.c. coupled unblanking). The absence of scan voltage at the coils is used to indicate a scan failure, and further protection is afforded by removal of focus and e.h.t. supplies.

A uniform and a constant focus of the scan is essential, not only for maximum resolution, but also in view of the afterglow and brightness changes which result from a larger spot. Due to the flat screen, the focusing field required varies over the scanned area. This modulated focus is obtained by means of two air-cored coils mounted about one-third the way between gun and screen. The first and larger coil provides the main focusing component together with a parabolic variation at field frequency. The second coil gives a similar correction at line frequency. A stabilised e.h.t. supply is obtained by means of an r.f. oscillator feeding a voltage quadrupler rectifier circuit, with overall feedback.

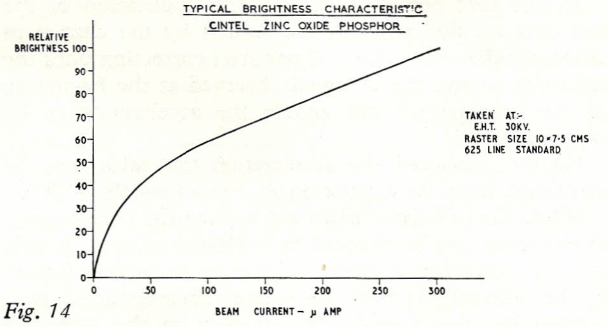

Fig. 14

The line and field deflector coils are wound together on an internally toothed ferrite yoke and driven by currents of sawtooth waveform with a cubic component giving partial compensation for the flat screen. Eight small magnets around the screen complete this correction and the scan obtained is linear to within 1 per cent.

A further small coil is fitted to the deflector for vertical spot wobble, as required for transmission of telerecorded material. This is driven by an 18 Mc/s oscillator of adjustable output sufficient for a displacement of twice line pitch.

Signal Pick-up

After passing through the film, the light from the scanner has to be collected, analysed, and converted to electrical signals as efficiently as possible in order to minimise shot noise. To this end, glass of a high refractive index is used for the condenser lenses to obtain the maximum advantage of the anti-reflection coating. A rear-silvered mirror is used for the monochrome/green light path.

For monochrome work, a spectral characteristic similar to that of the eye is desirable, to obtain an orthochromatic rendering of colour film. This can be approximated with two or three photocells. However, in order to obtain the maximum signal to noise ratio, a single photocell is used, resulting in a response shifted towards the blue by about 50 millimicrons.

For colour transmission, analysis into three components is carried out by red and blue reflecting dichroic mirrors in that order, followed by trimming filters of the interference type for red and blue, and of gelatine type for green. About 42 per cent of the available radiant energy passes to the photocells. Of the rest, roughly half is lost due to dichroic and filter imperfections in the pass-bands.

The dichroics and filters are mounted together with the relay condenser lenses and a mirror in a removable

Fig. 15

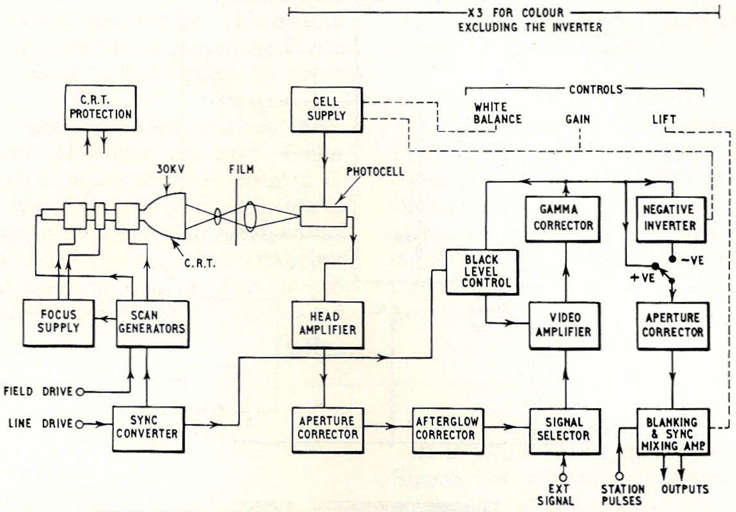

VISION CHAIN — FUNCTIONAL BLOCK DIAGRAM.

unit. This allows for easy conversion to monochrome by use of a second unit in which the colour components are omitted.

Two types of multiplier photocell are used in the telecine, both supplied by E.M.I. Electronics Ltd. For monochrome, blue, and green pick-up, a type 6097 is used having an antimony-caesium photocathode of S11 spectral response. For red pick-up the higher quantum efficiency of the tri-alkali type 9558 is advantageous.

The overall colour responses used are shown in equal energy form, in Fig. 16.

Photocell Supplies and Gain Control

The gain of a multiplier photocell depends markedly on the supply voltage, and this affords a very convenient control of signal level over a wide range. By this means, the head amplifier handles a constant peak signal, and this lessens the problem of distortion (at high levels) or spurious signals (at low levels). Moreover, adjustment may be carried out by control of a low voltage reference supply. This d.c. control can be made continuous and remoted as required, and therefore, forms the GAIN control for the telecine.

Provided the first multiplier stage is maintained at a high voltage, there is practically no increase in noise level.

A further advantage is that control sensitivity is roughly constant throughout the range whether viewed on a waveform or a picture monitor. This results from the approximately logarithmic relationship of supply voltage to cell gain. For the same reason, the control setting may be used as a guide to film density.

In a colour telecine, the red, green and blue signals may be adjusted in the same manner by a master GAIN control. It has been found that to obtain tracking between a pair of cells not necessarily of the same type, two pre-set adjustments to their supplies are sufficient.[7] Further, one of these two adjustments may be used subsequently as a White Balance control, at any setting of the master GAIN control, while maintaining the tracking condition. The tracking over a typical range of 20dB is better than that obtainable with ganged potentiometers.

Each cell is supplied from a bleeder chain of resistors, with suitable decoupling capacitors. The current through the resistors is stabilised by a high μ valve in series with the rectified supply, as shown in Fig. 17. In this circuit, the grid of the valve acts as a virtual earth, so that the cell voltage is proportional to the current supplied from the control network.

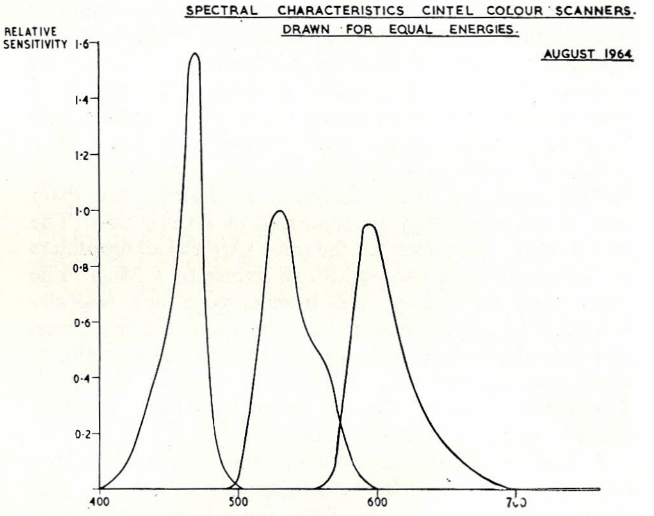

Fig. 16

Three such supplies are used, fed from one reference h.t. supply via a master GAIN control at the control desk. The procedure for tracking adjustments by means of three pairs of White Balance controls Rn, Rx, is as follows: With the GAIN control set at minimum, no current is supplied via Rx (the grid bias of the valve is compensated for by Rc). The three resistors Rn are adjusted on an open gate, for equal signals from R, G, and B cells. With a suitable neutral density in the gate, e.g., value 1·0 for a

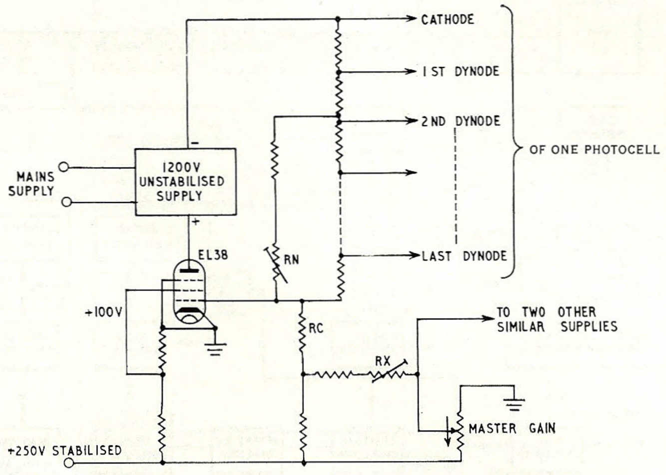

Fig. 17

COLOUR TELECINE PHOTOCELL SUPPLY

range of 20dB, the GAIN control is set to maximum and the three Rx adjusted for equal signals once more.

This circuit has one other advantage. Any subsequent trimming of white balance may be carried out using Rn only, without upsetting the tracking of the signal over the whole control range.

The Amplifier Chain

The function of the amplifier chain is to process the output of each photocell to form a standard TV signal. The chain falls into two or three parts which are more or less separate according to requirements. Certain units are necessarily associated with the mechanism which may be some distance from the control position. The latter is of desk format with picture and waveform monitors, and houses the main controls used during operation with a variety of others necessary for line-up. Space is allowed for talk-back and other facilities. If desired, the main part of the chain may be separated as a third unit. The vision chain uses valves for the most part and all amplifiers are designed for a band-width in excess of 5 Mc/s. The units used for colour and monochrome are basically similar. The colour telecine uses three sets for red, green and blue signals, together with certain common facilities, while for monochrome a negative inverter is added. The block diagram, Fig. 15 shows the main function carried out by each amplifier chain.

A head amplifier mounted close to the cell housing raises the peak signal from 60 microamp to about 5 volts at low impedance. This amplifier has a level response up to 5·5 Mc/s, obtained by well-known feedback techniques,[8] and amplifier noise is not significant.

The aperture corrector which follows is, for reasons of space, incorporated in a separate amplifier. It may be switched for 405 or 625 line operation and gives variable first order correction for aperture losses in the scanning system. On 405, a simple 3 Mc/s band limiting filter is included.

The overall frequency response of the chain includes correction for scanning as is described later.

An output of about 2 volts is fed from the mechanism cubicle to the control position. Here an adjustable passive network corrects for the longer terms of the phosphor afterglow. In monochrome equipments, up to four separate networks may be provided to deal with 405 and 625 line standards and with spot wobble on the scanner. This allows for rapid changes between working conditions by means of relays. Each corrector is a short circuit at high frequencies and may, therefore, be placed anywhere in the transmission line from mechanism to video cubicle. The correctors are adjusted while observing the picture streaking obtained from a bar pattern, and are therefore placed near the picture monitor. The phase corrector networks are conveniently included here as different values are required for 405 and 625 line standards.

At this point where the signal is at standard level, a signal selector is provided for the injection of staircase, grid pattern, or other external test signals. These may be superimposed on the scanner signal or applied separately to the rest of the chain. In the colour telecine the three chains may be fed with a common input, either the scanner R, G, B signals or an external test signal. The latter setting is used when matching the overall transfer characteristics, usually with a sawtooth signal.

A flying spot scanner is essentially linear and a gamma corrector is necessary to compensate for the non-linearity of the receiver cathode ray tube. This corrector is preceded by an amplifier which raises the signal level appropriately and also provides correction for the very short term afterglow losses. A black level control unit operates a d.c. feedback loop round the corrector to stabilise its non-linear characteristics. Clamp pulses, timed to occur during the final 5 microseconds of the scanner flyback, are provided for one or more chains by a synchronising converter unit, which also re-times the scanner line drive pulses.

In monochrome equipment, a negative inverter is provided for insertion at this point when negative film is to be transmitted. The characteristic of this unit approximates to that of the photographic printing process and operation is assisted by partial compensation for exposure changes, as described later.

Further aperture correction follows, of about 6dB at 5 Mc/s, together with correction of all phase errors subsequent to gamma correction.

Finally, the signal is blanked; pedestal and synchronising signals are added, if required; and two standard level outputs provided. The d.c. level at the input to the blanking stage is adjusted by a LIFT control on the control desk, and this is used together with the photocell supply GAIN control to set the correct signal levels during operation. For colour work, similar operation may be obtained by feeding the master LIFT control potential to each blanking stage in varying proportions.

Correction for Scanning Losses

In the process of scanning, a significant loss of picture sharpness occurs, due to the persistence of the phosphor after being scanned, and the finite size of the scanning spot. The former is much the more serious when a zinc oxide phosphor is used, the loss at 5 Mc/s being typically 15dB. Residual lens aberrations are usually quite small in effect.

In a well designed system, the two latter losses are symmetrical in kind, i.e. the shapes of the equivalent scanning aperture and of the resulting transient response are symmetrical about the centre. It is logical to correct for this aperture loss by circuits which themselves have a symmetrical transient response, particularly when it is desirable to be able to adjust the amount of correction.

The afterglow loss is essentially asymmetric and consequently is corrected on the basis of signal waveform symmetry rather than depth of modulation in response to a regular pattern. Since the amount varies with working conditions, adjustment is necessary, and it is logical to use minimum phase-shift networks for this purpose.

The film record itself suffers from a loss of resolution, which is considerable even in the highest quality prints, 35 mm as well as 16 mm. This may be partly compensated by further aperture correction, but scratches and dirt on the film are then liable to become very pronounced in the picture, due to over correction. This applies also to blemishes in the scanning tube screen, and it is usually better to operate with less than full definition (say 50–70 per cent modulation at 3 or 5 Mc/s).

These aperture losses affect both horizontal and vertical definition (afterglow is negligible vertically). Although correction could be applied in both directions, vertical correction is a complex operation, and it is not generally provided in film scanners. For this reason, and also because a less noisy picture results, the scanning system should be designed to give a good response before any aperture correction is applied.

The reproduction of picture detail is also affected by the interaction of two characteristics of the television system as a whole. The transfer characteristic of the system up to the display tube is non-linear. Not only is it necessary to set definite limits for peak white and absolute black, but the signal has to be pre-distorted to correct for the power law of the receiving cathode ray tube. This nonlinearity would not by itself present a problem in a system of adequate bandwidth (i.e. one in which the full content of the signal source, e.g. film, is retained and each scanning loss corrected as it occurs). The broadcast signal however, has a limited bandwidth, of which full use must be made to achieve the maximum performance.

In these combined circumstances it is not possible, in general, to transmit picture detail accurately, even that which falls within the system bandwidth. The errors are negligible for detail of low contrast, but increase noticeably as the detail contrast rises. In one form of error, the mean value of some fine patterns is depressed if the bandwidth prior to gamma correction is greater than transmitted. On the other hand, the mean value of the fine pattern tends to rise when aperture correction is placed after gamma correction. Therefore, the question arises as to whether some optimum result can be achieved by providing part of the correction for aperture loss after the gamma corrector.

The overshoots which accompany a large signal are an important aspect of this problem. In a fully corrected signal these amount to 9 per cent for a step function waveform, so that a picture contrast in excess of 12:1 will result in overshoots beyond black. The situation is worse still for short pulses. It has been shown[9] that with a spectrum which falls linearly to half value at the cut-off frequency, there is no overshoot in a step function signal (the first ripple is an undershoot of 1 per cent). Alternatively, a spectrum falling linearly to zero has no overshoot in a short pulse.

In the amplifier chain described earlier, overshoots are reduced by approximating to the first of the above techniques. Before gamma correction is applied, the afterglow loss is compensated and some aperture correction provided. The gamma corrector contributes to the desired falling frequency response, and to obtain a level overall response the corrector is followed by a network giving a further 6dB of aperture correction. A linearly rising response is approximated by the use of three time-constants.

The variable aperture corrector before the gamma corrector uses an unterminated delay line to approximate a cosinusoidal frequency response, of which the first quarter of a cycle corresponds to 3 or 5 Mc/s as the case may be. This has the well-known advantage that waveform symmetry is not altered by a change in the amount of correction.

The overall bandwidth prior to gamma correction is approximately limited by simple networks. Group delay errors introduced by the various amplifiers and filters are dealt with by two all-pass phase correcting networks, one for errors before gamma correction, and another for those after.

Adjustment of the variable aperture corrector permits a level overall response to be obtained from a test pattern and the overshoots in the gamma corrected signal are then observed to approximate to zero, as described.

Gamma Correction

A uniform contrast compression or gamma of about 0·4 is required to compensate for the receiver cathode ray tube, on both monochrome and colour transmissions. The gamma corrector and black level control unit is designed to handle signals having a contrast range of up to 50dB, using a technique first developed in 1938 and described elsewhere.[10] This range is more than adequate for the display of positive film material on domestic receivers. Gamma values of 0·35 to 0·5 can be set up, but the corrector is not intended for the considerable gamma over-correction which has been suggested for colour film.[11]

Negative film material is characterised by a smaller contrast range and requires further correction with a gamma of about −2 to simulate the photographic printing process. In addition, it has a more variable highlight density due to exposure differences. For example, a good negative might cover the range 0·3 to 1·3 in density, while one of similar contrast but greater exposure might cover the range 1·3 to 2·3. The range of the 0·4 gamma corrector has been found sufficient for most negatives without re-adjustment of the input signal level. Further, the output signal has a very low contrast, typically only 8dB (i.e. 0·4 of density 1·0), and may be contrast inverted without difficulty. For negative operation, therefore, an inverter is inserted in the chain after the 0·4 corrector. This unit reverses the signal polarity and uses a variable-mu valve to approximate to the desired transfer characteristic.

This arrangement has advantages in signal level control. A change of exposure appears at the output of the first corrector as a change of D.C. level in the signal together with some change of signal amplitude. By using an A.C. coupling before contrast inversion, the main effect of an exposure change is eliminated and the operator is relieved of the difficult task of timing relatively large changes of control settings. In practice, the weight of the signal usually changes by only small amounts and control is no more difficult than with positives. Two conditions have to be met by the A.C. coupling network. It should produce negligible low frequency tilt in the signal, while at the same time removing d.c. changes in less than 100 milliseconds. This is achieved by use of a multiple CR network, which is arranged to give a flat-headed transient response.

To deal with changes of film contrast and the secondary effects of exposure changes, control of signal amplitude is necessary. This is provided to some extent by the photocell supply voltage, but to keep within the range of the first corrector, extra gain control later in the chain is desirable. Bias from the GAIN control is therefore supplied to the variable-mu valve in the inverter. With the above A.C. coupling in use, the GAIN control then operates, by virtue of both its functions, very much as in positive working. That is, clockwise rotation increases the peak white level without affecting the picture black level appreciably. The bias adjustment in the inverter unit enables standard levels to be set up on a test film with the GAIN control set to any desirable position.

Negative transmissions are characterised by a noise level which increases from black to white in the picture. A flying spot scanner with a multiplier photocell is better in this respect than a vidicon telecine, and the new scanner has been found to give excellent results, even with negatives of high density.

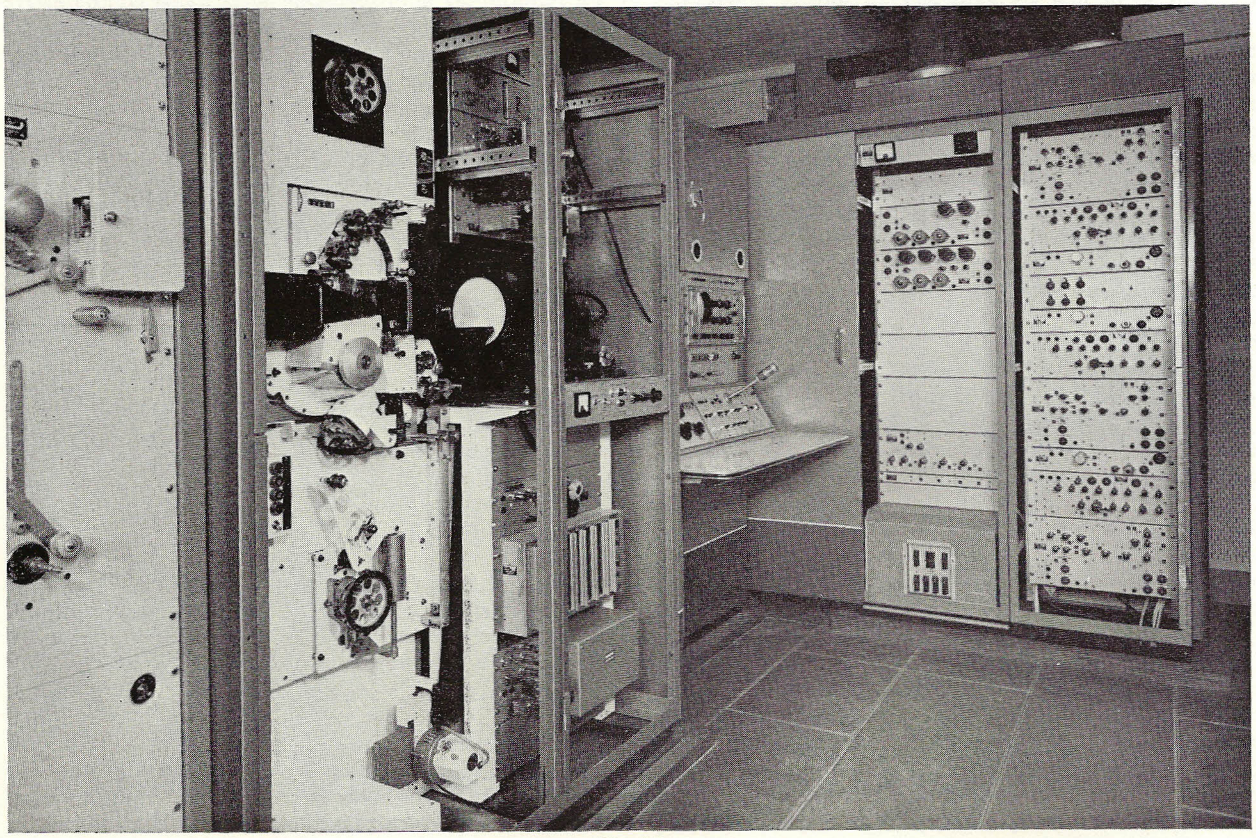

Fig. 18

Colour Operation

The use of film in colour television presents special problems[11] which become much more urgent when inserts into live productions are required. Moreover, some compromise between colour rendition and noise has usually to be made. Any scheme for telecine improvement must be based on a wide range of sample films, with some understanding of film production techniques. Simple and consistent operation is a further essential. This implies the minimum of colour adjustments and the placing of any pre-set controls under the command of a master technician who may be remote from the telecine.

The telecine chain described gives excellent results from good films, by use of three matched amplifier chains only. No provision is made for masking, gamma over-correction, or techniques of colour balance correction. Control and setting up is carried out as follows.

A waveform monitor is normally fitted providing display of red, green and blue signals. The selector switch is arranged to feed out the same signal, for an external picture monitor. In addition, the differences R-G, G-B, B-R may be selected, with an increase in sensitivity of 5x and a low bandwidth to reduce noise. This facility is used when balancing the chains. Sensitivity is sufficient to allow measurement to within 0·1 per cent of peak white signal.

It is convenient to work with equal levels at the output of the afterglow corrector and balance the chain in two parts. Equal levels at this point then correspond to a white picture, for example, an open gate. After initial setting up, white balance normally requires little adjustment, provided time is allowed for the equipment to stabilise at working temperatures, in particular the scanning tube phosphor.

Balance of the rest of the chain is carried out by adjusting the gamma corrector characteristics, the signal amplitude before and after the corrector, and lift in the output signal. An external test signal of sawtooth or staircase form is preferably used, or a density wedge film may be scanned. Balance to within 1 per cent of peak white may be achieved with little practice.

Control of signal levels is carried out by master GAIN, operating on the cell supplies as already described. Control of LIFT may also be provided, by adjusting the D.C. levels of the RGB signals prior to blanking. Tracking of lift is obtained by two controls, one set with master LIFT at minimum, the other at maximum. As with cell GAIN control, the "minimum" controls are used for subsequent balance of the signals.

Acknowledgments (Part 3)

The author's thanks are due to all those colleagues who have assisted in the developments described in this section of the paper. Particular mention should be made of Mr. A. R. Tingley, who has contributed much to those aspects of the vision chain which affect colour performance.

Part 4

By P. Lowry

Parts I to III described the production of the video signals. Part IV includes the sound, and describes the layout of the complete equipment with emphasis on switching and control facilities, monitoring, and other features important for the operational convenience of the user, concluding with a brief resumé of the performance figures obtained.

Layout

The BBC have a wide experience in the use of all types of film scanners, and their advice was followed in the layout arrangements for the first batch of machines for their use. As shown in Fig. 18 an inverted "L" shaped floor plan was adopted, the units to the left of the operator being the scanning and motor drive cubicle, traction mechanism, and a separate sound recorder, while to the right of the operator can be seen the video processing channels. This installation layout was chosen because, when positioned adjacent to a 35 mm telecine, the two sets of video channels are conveniently close to each other which facilitates colour channel matching.

On the left side of the control console are two monitors, one for observing the telecine output and the other for the receipt of visual cues, each being equipped with multiple input switches for signal balancing. Below the monitors on the sloping panel are the operating controls for video lift and gain, the sound fader and film traction push buttons. At the top of the right-hand side are four sets of after-glow correctors, for 405/625 operation, with and without spot wobble. Multiple video switching is also available at the input to the waveform monitor which is below the after-glow correctors, and below this again is a control panel for sync and sound source selection. The right-hand sloping panel has intercommunication facilities and power switching controls.

Different layouts have now been prepared to suit the requirements of other users.

The main factors that had to be considered during the design stage were as follows:

1. Easy access to film transport mechanism for lacing.
2. Minimum of operator fatigue during picture generation.
3. Accessibility to mechanism and electronic units for maintenance.
4. Remote control of film transport.
5. Suitability for multiplexing.
6. Adequate sound facilities.
7. Ability to drive separate sound reproducers.
8. Conversion to colour on customers' premises.

These features are discussed under appropriate headings.

Lacing

Because of the unconventional mechanism—with facilities for various modes of operation (forward or reverse, commag or comopt, etc.) and the provision of safety interlocks—the film path is more complicated than in a standard 16 mm projector. It has, nevertheless, been designed in such a manner that an operator who is used to handling film can lace and unlace the machine very rapidly.

Both film spindles are restrained from rotating freely when the machine is at rest and, in addition, the film spools are retained on their mounting spindles by a self-latching device[12], thereby further easing the loading of heavy spools. For test purposes or the generation of repetitive scenes a short loop of film may be used. Having laced the machine it is often desirable to run it slowly either to check that the machine is ready for use, or to position a particular film frame in the gate prior to run-up. By pressing an "INCH" button the machine will run steadily in the forward direction at approximately one-tenth full speed.

Operation

When using the machine as a programme source it is normally only necessary to adjust the video lift and gain and the audio gain to accommodate changes in film quality and recording level, at the same time observing a picture monitor and sound level meter; these controls are conveniently placed adjacent to the "STOP" and "RUN" buttons on the sloping control panel. For alignment of the machine and more detailed observation of performance, additional controls and a waveform monitor are incorporated.

Maintenance

Apart from the control facilities, those areas of the suite to which front access is required have protecting doors.

Vertically sliding roller doors, an innovation for electronic equipment, have been used at the rear of the machine, thereby permitting it to be mounted in close proximity to a wall but yet allowing easy access to the rear of the equipment for maintenance staff and their test gear. All rear doors associated with high voltages or moving mechanical parts have electrical interlock swiches to prevent accidental injury to maintenance staff but an override facility is provided on the control desk should it be necessary to obtain access when the equipment is being used on transmission. Scan generators and video processing units use well-tried valve circuits and the form of construction (vertical chassis with valves on one side and readily accessible components at the rear), permits operators and maintenance staff to gain a detailed knowledge of the circuit layout, thus favouring speedy maintenance and service in the event of breakdown. The use of transistors in the motor control unit enables a much higher component packing density to be achieved but care had to be taken to avoid inaccessibility. A proprietary version of plug-in card has been used which will have wider application as further telecine units become transistorised.

Remote Switching

As the complexity of television programme productions increases, it becomes more necessary for all the remote units that are contributing to the presentation, such as telecines and video tape reproducers, to be switched under direct control of the technical supervisor in the originating studio.

This, of course, does not necessarily dispense with the telecine and V.T.R. operators; they still attend to loading, unloading and operational monitoring, but the ability to have stopping and reversing under studio control enables the producer and his technical staff to present a more polished performance.

During rehearsal, it is often necessary to run forward to a particular film sequence, reverse, and then run the sequence through again a number of times before the desired artistic effect is achieved.

When used in this manner, the picture and sound quality need not be monitored as is necessary during transmission, and the work load of the telecine operating staff is thereby reduced.

There are two essential requirements for the design of any remotely operated machinery. First, that there is no risk of personal injury to operators or maintenance staff who might be working locally on the machine; and second, that in the event of malfunctioning of any part of the mechanism, the machine is shut down to prevent further damage.

Even when the machine is under local control, it is prudent to provide certain interlocks so that the minimum of damage is suffered by either the machine or the film in the event of a breakdown. In a film machine, the most likely cause of trouble is due to breaks or poor joins in the film and any damage must be confined to as few film frames as possible.

Limit switches are located on both the upper and lower compliance arms to detect either breaks or the end of the film. The interlocking is such that in the event of a break below the soundhead, i.e. when the lower but not the upper compliance arm switch is operative, the mechanism will not stop since, in their endeavour to provide an uninterrupted programme, it is a matter of pride among operators that the spilling film be wound on to a new lower spool while the machine continues to run.

Two auxiliary interlocks may also be mentioned. One ensures that when a loop is in use the take-up and braking motors, which are not required, do not run. The other is associated with the electromagnetically operated sound drum clutch which permits the flywheel to be driven by the film only when the mechanism is running synchronously. At other times, that is during the run-up, run-down or when stationary, the flywheel is clutched into the main gear train. Further, the flywheel capstan should be free to rotate when lacing the machine to observe that the free loop is of the required length, and a switch is provided to energise the clutch when lacing. If, however, the switch were inadvertently left in the lacing position when the machine was started, the object of having a driven flywheel would be defeated during run-up, thus the machine is interlocked to prevent it from starting under this condition, a warning light informing the operator of the incorrect switch setting.

Even with remote operation, the local operator must have the facility for reacquiring control should he consider it necessary and the REMOTE/LOCAL switch is mounted on the control console.

Multiplexing

It is always desirable to obtain the maximum utilisation from equipment and in designing this traction unit, the possibility of multiplexing with a second unit or with existing 35 mm telecines was examined, since the flying spot scanning assembly and video chain are similar.

It is not practicable to multiplex 35 and 16 mm mechanisms on to one scanning tube, as they use rasters of different aspect ratios and burn different patches on the phosphor screen. Two 16 mm mechanisms might be multiplexed on to one scanning tube, but only at an unacceptable cost in terms of convenience of layout (right and left-handed mechanisms, or operating positions on both sides of the machine).

The practical arrangement that has been adopted uses separate scanning tubes for each of two traction units and one multiplexed video channel, with a simple secondary video chain for preview; by adopting such an arrangement continuous film operation can be maintained with the minimum of equipment.

Sound

To match the high video performance of the machine, it is desirable to achieve a sound performance comparable to that specified for contemporary separate sound reproducers, especially with regard to bandwidth, signal/noise ratio, wow, flutter and hum.

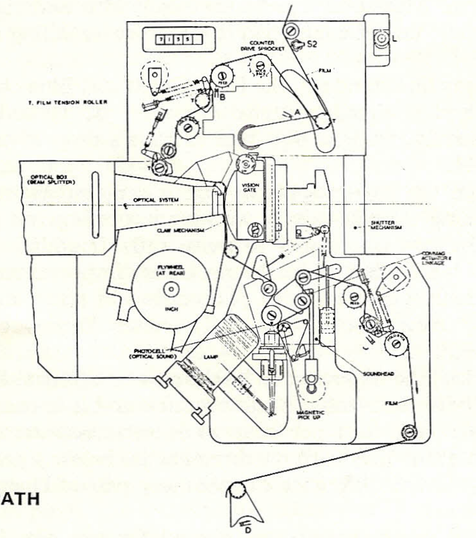

FILM PATH

Fig. 19

To protect the sound head against possible vibration transmitted from the motor and cam mechanism at multiples of $12\frac{1}{2}$ cycles/sec, the main casting of the sound head is isolated by three anti-vibration mountings giving a resonant frequency of approximately 17 cycles/sec.

Flutter at multiples of perforation frequency (25 cycles/sec for 16 mm film) may be introduced both from the claw mechanism feeding in the film and the sprocket pulling it out (in this respect the behaviour of the claw mechanism is not significantly better than a good sprocket). The defence against flutter is the sound filter, the heart of which is the flywheel.

Because of the steps taken (see part I) to drive the flywheel from the mechanism when starting or stopping, and so to prevent film damage by slipping, the flywheel can be of generous size. Its weight is taken on a ball-race at its centre of gravity within its hub, leaving only a very light loading on the plain bearing steadying the capstan end of the shaft.

The sound head layout and film path are shown in fig. 19. The filter action is completed by compliance introduced by the spring-loaded rollers on each side of the capstan. The second roller is connected to an oil dashpot to provide critical damping to minimise "wow".

The spring loading of the first roller is arranged (by offsetting the attachment point of the spring to control its line of action) to maintain a constant tension of approximately 80 grams in the film between the claws and the sound capstan. This is a lower tension than would normally be chosen for the sound head, but is dictated by the "feed" mode of operation which requires that the film tension below the claws should be somewhat less than above them*. (*See page* 22.)

During reverse running the tension is further reduced by a solenoid actuator. Reversed sound is used only for monitoring purposes and its quality is unimportant.

Sixteen millimetre film may carry either magnetic or optical sound (COMMAG or COMOPT); provision is made for both, with remote electrical system selection.

Although the exciter lamp for optical sound is under-run for long life, the housing is designed to facilitate lamp replacement and incorporates a vented chimney to aid cooling and minimise temperature rise of the sound head. A conventional optical system is used to image a narrow slit of light on to the film; a lens adjustment against fixed stops gives choice of focus on either side of the film base.

The edge of the film is guided against one flange of each of the (slightly tapered) tensioning rollers. Axial adjustment of these rollers provides for centering the sound track in relation to the light beam. A silicon photo-cell is used; because of its small size it can be positioned very close to the film, dispensing with a condenser lens.

The magnetic head is fixed close to the capstan drum, where the film leaves the drum. The film must contact the head only when the head is required to be used—at other times the film must run clear of the head to avoid scratching optical sound tracks. The required change of film path is effected by means of a roller, mounted on the triangular plate shown in Fig. 19 in the COMOPT position with the film clear of the head. For COMMAG working the triangular plate moves to a lower position to bring the film into contact with the head.

In either working position the triangular plate is held rigidly by a six-point kinematic location, but it can move freely between the two positions. Movement is imparted, via a slightly elastic link, from a crank which rotates through 180°. The throw of the crank provides slightly more than the required movement, the excess being taken up by straining of the elastic link. The resulting large force (which the crank can provide close to its "dead centres") locks the triangular plate firmly against its kinematic constraints. The crank is driven through a step-up gear from a rotary solenoid, thus providing remote electrical selection of COMMAG/COMOPT working.

The photocell and the magnetic head feed separate transistorised line amplifiers which provide standard level signals to the COMMAG/COMOPT selector switch on the control panel. A band-pass filter is included in the magnetic channel to obtain the desired frequency characteristics.

The outgoing line feed is via a constant impedance fader and may be monitored by PPM or VU meter.

Separate Sound Reproduction

Picture and sound information are not always together on one film stock. The sound track of such unmarried film is invariably magnetically recorded on a separate 16 mm oxide coated stock.

A SEPMAG sound reproducer must run in synchronism with the film passing through the telecine and it is current practice to use a Selsyn interlock system. The reproducer runs as a slave from the master Selsyn which is mounted on the rear of the machine below the main drive motor.

It is desirable to isolate the telecine as much as possible from fluctuating reproducer loads and a compliant spring coupling has been included in the drive arrangement.

The pulley on the telecine motor drive shaft comprises an inner driven boss which transmits torque via eight radial springs to the drive sprocket. A toothed belt ensures a constant 2:1 step up ratio between the telecine and the master Selsyn which runs at 1500 rev./min.

Colour Convertibility

While this machine has been primarily designed for three-channel colour working, it is recognised that many authorities will be limited to monochrome generation for some years to come, and hence a monochrome version has been designed that may readily be converted to colour at a later date.

At the time when this machine was designed, there seemed every hope that most operators would wish to convert their machines to colour after perhaps two or three years of monochrome operation and the basic design of the traction unit cubicle has been made such that the extra two video processing channels required for colour are contained in one extra cubicle, and the cableform within the main equipment has been arranged to readily accommodate the additional interconnections for colour.

Having the same basic traction mechanism, the monochrome machine utilises a simpler condenser assembly which has one mirror only to direct all the light on to the basic green channel photocell. The condenser box has been designed as a detachable sub-assembly so that the appropriate box may be used should it be desired to change from monochrome to colour at frequent intervals. It is of course possible to leave the colour box *in situ* when originating monochrome programmes, but the correct assembly gives some 7dB signal/noise improvement.

There are many occasions on which it is desirable to use negative film stock in the machine, e.g. with news rushes, and the video channel includes a negative inverting facility (described in Part III).

Summary of Performance

Throughout these four papers, little reference has been made to quantitative performance of the machine; the authors have concentrated on the various design solutions that have contributed to its quality.

Quantities are, however, the means of expressing quality and the remaining part of this paper is a summary of the more significant parameters.

The machines will accept spools up to 17 inches diameter, which represents one hour's running time for 2400 ft of striped magnetic film. Optical focus may be switched to suit film having emulsion on either side of the base.

It will be recalled that the claw action compensates for film shrinkage and there is no deterioration of performance over the range 0 to 1½ per cent.

When running in the synchronised condition, neither the side-to-side weave nor the vertical unsteadiness exceeds 0·07 per cent. Scan distortions are also low, both line and frame linearity and picture geometry errors are all less than ½ per cent.

Techniques for measuring telecine resolution have advanced considerably during the past few years and considerable attention has to be given to the quality of the test film. Measured figures for bandwidth and signal to noise ratio must be modified to allow for its falling resolution.

At 405 line standard, the Red, Green and Blue channels have typical signal to noise ratios of 32, 39 and 39dB respectively, while at 625 lines there is a drop of 5dB per channel.

When the colour splitting box is replaced by the one containing a single mirror working into the green photocell, the 405 line signal to noise ratio is 46dB. (These figures were taken on early machines; improvements are continually being made in photocells and tubes and it is already clear that substantially better figures can be achieved).

Flicker, the difference in level between alternate frames, varies between machines and channels and is in the region of ½ per cent to 3 per cent while variations across one field in either line or frame direction are below 5 per cent; the maximum difference between any pair of channels is 4 per cent.

Sound measurements are quoted for test film having 40 per cent modulation at 1 kc/s. The frequency response of the optical channel is within 3dB from 50 c/s to 7 kc/s and a total r.m.s. noise figure of 45dB is achieved, the corresponding magnetic figures being 100 c/s to 10 kc/s giving a signal to noise ratio better than 50dB. Both wow and flutter on each channel are well below 0·2 per cent.

Looking back at these 16 mm performance figures, it is recalled that it was only just over a decade ago that comparable results were achieved on 35 mm machines. One cannot help but wonder if, ten years hence, this order of performance will be achieved with 8 mm films.

Throughout these past ten years many engineers, ably led by Mr. Nuttall, at Sydenham have contributed to the fund of knowledge which has made this performance possible. I should like to acknowledge their help and also that of those members of the BBC engineering staff who have encouraged us to achieve this goal, although on rare

---

** The claw mechanism was designed before the sound head. In retrospect it appears that conditions more favourable to the sound head would have been obtained by designing the claw mechanism (with appropriate cam profile changes) for "hold-back" operation, with higher tension after the claws.—T.C.N.*

occasions when not accepting some performance figure, it seemed at that time to be a negative contribution!

General Acknowledgments

The work described in this paper was started by Rank-Cintel in 1959. Owing to the novelty of the principles the work had to proceed cautiously, with only a limited number of engineers, until the principles had been established. The subsequent production of the machine has required the combined efforts of the Rank-Cintel drawing office and production personnel too numerous to mention individually. The sound head was developed by Rank Research Laboratories. Valuable assistance in formulating the operational requirements of the machine was provided by the BBC, who also co-operated in the demonstration.

Thanks are due to the Director of Engineering of the BBC for permission to describe their installations and to the Directors of Rank-Cintel—a division of the Rank Organisation—for permission to publish this paper.

DISCUSSION

Mr. C. B. B. Wood (representing the Television Society) opening the discussion: We've had such a wealth of interesting detail here tonight, I think it would be quite impossible in this short time to comment on all of it, so if Mr. Askew and Mr. Boston and Mr. Lowry don't mind I would like to concentrate on the work of our old friend, Mr. Nuttall, and to remark that obviously the maestro has done it again.

Clearly this machine works remarkably well; the thing that interested me most was the very clever philosophy underlining the mechanism. Who would have thought that you could have taken a claw, which everyone knows is an intermittent thing, and turn it into a device for making continuous motion. The first time I ever saw this machine it was in a very prototype state and it was in fact turned through 90° so that it did a "come hither" motion. It's really a brilliant design.

What this really means is that it may open up a whole new field of high-grade television. Sixteen-millimetre film, to the professional broadcaster, has always been a pretty poor sort of thing. It's been the sort of thing you avoided if you possibly could, and it's possible that we may see the beginning of a new era with this machine.

Going back, if I may to 1948, I remember what television pictures were like in those days. We used to have those old Mechaus between the two studios at Alexandra Palace, and they used to blow a rather poor, flickering sort of picture into an iconoscope, so the pictures that came out were worse than those of iconoscope studio cameras because you had all the trouble of the film and the mechanism added to the rather indifferent performance of the cameras of those days. Then came the flying-spot scanner, and overnight everything changed.

There is no doubt, I think, that a 35 mm flying-spot scanner produces the best moving pictures you can get from television. This new machine is going to mean we can choose to use 16 mm film under conditions where there isn't some circumstance which forces us into its use. But we've got to do some more things: we've got to get a better image on the film, and we've got to be able to make a better print from the original 16 mm negative.

One further point: there is still the problem of the exact location of the sprocket hole of the film to ensure steadiness and I would like to ask Mr. Nuttall if he has any further thoughts on this because I think the one thing on which I could fault this evening's demonstration was that we still had the old 16 mm frame bounce. I suspect that none of it was to do with the telecine machine—that it was all in the film. But until we have learned to master the film, until we have learned to take out, somehow or other, the mechanical inaccuracies which seem to be absolutely inevitable, then I think we still have a problem with 16 mm which is, I think, about 2·4 times as great as that same problem is in 35 mm film. This, of course, is just the ratio of the frame heights.

It is a wonderful achievement, and I really hope that other people concerned with making films will be able to pull their standards up sufficiently to take advantage of this very new and very beautiful machine.

Mr. Nuttall. Thank you very much. You are quite right about the difficulty of the perforations producing unsteadiness. Some of the unsteadiness might be cancelled if it were possible to use the identical perforation for the camera and the telecine—and there are other troubles which increase as you get farther away such as the effect of film splices. I would certainly like to be able to use the same perforation as the camera.

Mr. Laughton (Television Society). What I would like to know is what has been done with the long optical paths involved in the two images to reduce the present flicker. Is it somewhat similar to the previous 35 mm where pieces of wire were put across one lens, or is there some more elegant solution than that?

Mr. Nuttall. No. In this case we are not using any special tricks, other than keeping everything clean and so on. We did on one occasion run into trouble but that was due to dust on mirrors. I think the use of these glass prisms with internal reflection has made it cleaner and that is probably why we have less trouble with the 16 mm than with the 35 mm. We still have some trouble of that kind—with dirt getting into the gate and so on—but the flicker itself seems to be mainly a matter of keeping the optics clean, and I think the 16 mm design is possibly better in this respect than the 35mm.

Mr. Parker-Smith (Television Society). Could we know the relative amount of light, say in lumens, which can be got through the film gate in the 16 mm case and on to the photomultipliers as compared with the 35 mm gate?

Mr. Nuttall. The 16 mm picture is smaller, but the optical aperture is larger. There are other factors as well, of course, such as the number of glass-air surfaces, the number of mirror reflections and so on. I worked this out some time ago as between a half and one dB on signal/noise; in other words it's very close. It might be 20 per cent down in light, but no more than that.

Mr. West. There are a number of problems I'd like to ask about: firstly, on the sound, have you made provision for refocusing the sound tracks with emulsion on either side?

Secondly if you are running ungraded negatives, how quickly can you optically grade for shot grading? Present telecine seems to be rather slow, or perhaps the operators are slow, but in the running of news negative in particular one sees wide variations of gain and lift which take quite a long time to adjust.

Mr. Askew. Sound refocusing is a matter of a lever—nearby is the supplementary lens for the picture and both these are something like equidistant from the operator's position.

As far as lift and gain settings are concerned, it depends on what positive and negative you've got. You may have a very good thin positive and you might have a very low-contrast, dense, negative, but with our system of negative control we try to do as much as possible to help the operator.

Mr. West. Third question: on the steadiness problem, is there going to be a slight problem in that on a high class 16 mm camera you have the register pins as well as the claw—and I presume it is the register pin you have to match rather than the claw. Unfortunately they do not agree in various cameras.

Mr. Nuttall. If the camera has a normal claw mechanism I believe it registers in No. 3 perforation, whereas we have to use No. 4. Now I don't know how the cameras work with a register pin—does it go in the perforation adjacent to the gate?

Mr. West. Yes.

Mr. Nuttall. Then that is yet another standard. We are near the normal claw standard—but still one perforation too far away.

Mr. Stocks. Can you quote a few vital electronic statistics in particular signal/noise ratio, depth of modulation at 400 lines, and how much of that do you blame on the film?

Mr. Lowry. Our test specification follows very much on the lines of the BBC specification which they do issue for telecines.

Mr. Askew. You can reckon that 16 mm film is very much down on the 35 mm which itself is not always very good. We can put aperture correction in; if you take the SMPTE film I think we could say that in the centre we are 1 or 2dB down at the top end of the spectrum and the signal/noise is probably, in relation to this, something like 42dB. But the measurement of these things and what they mean is not very precise, I'm afraid.

The Chairman (*Mr. Patrick*) asked Mr. Brian Grimshaw, President of the B.K.S. to move a vote of thanks.

Mr. Grimshaw. We have heard some extremely interesting papers tonight; we had the papers from Rank-Cintel and we had rather a nice little paper from Mr. Wood as well. Obviously the amount of work that has gone into preparing these papers tonight has been a bit phenomenal and this is only in fact a small amount of the work that must have gone into designing these machines and getting them into production conditions. All I can really say is that we are very grateful to Rank-Cintel and their associates in the BBC who have been tied up in these demonstrations tonight who have given us a very pleasant and interesting evening. Before I ask you to join me in showing appreciation to speakers in the usual way, I would just like to say that we are very pleased tonight to have the Television Society with us in this joint paper and I would like to support the views that the chairman has made earlier in the proceedings that we hope perhaps to have further co-operation in this way in future lectures. May I ask you now to join me by showing your appreciation of the excellent papers we have heard tonight.

Waterlow & Sons Limited · London · Dunstable · Hyde